AGENDA
CITY OF MONONA
FACILITIES COMMITTEE
City Hall
Wednesday February 16, 2016
5:30 PM

1. Call to Order

2. Roll Call

3. Approval of Minutes from the **9/16/2015** meeting.

4. Appearances
   A. None

5. Unfinished Business
   A. Review of Schluter Park Restroom Facility Project Documents

6. New Business
   A. Review of Committee Role and Responsibilities toward Facilities Improvement Process Moving Forward
   B. Review of Facility Development Process
   C. Committee Discussion on Potential for Project to Retrofit LED Lighting at Fire, Police, and Public Works Garages
   D. Committee Discussion on Suggested Facilities Maintenance and Renovation Schedule

7. Next Meeting: TBD

8. Adjournment

Please notify Brad Bruun at 222-2525 or bbruun@ci.monona.wi.us if you cannot make it.

NOTE:
Upon reasonable notice, the City of Monona will accommodate the needs of disabled individuals through auxiliary aids or services. For additional information or to request this service, contact Joan Andrusz at (608) 222-2525 (not a TDD telephone number), FAX: (608) 222-9225, or through the City Police Department TDD telephone number 441-0399. The public is notified that any final action taken at a previous meeting may be reconsidered pursuant to the City of Monona ordinances. A suspension of the rules may allow for final action to be taken on an item of New Business. It is possible that members of and a possible quorum of members of other governmental bodies of the municipality may be in attendance at the above stated meeting to gather information or speak about a subject, over which they have decision-making responsibility. No action will be taken by any governmental body at the above stated meeting other than the governmental body specifically referred to above in this notice.

MINUTES- *DRAFT*
CITY OF MONONA
FACILITIES COMMITTEE
City Hall- Large Conference Room
Wednesday, September 16, 2015
5:30 PM

The regular meeting of the Facilities Committee for the City of Monona was called to order by Chairman Jim Busse at 5:36 pm.

Roll Call

Present: Dan Eklof, Jim Busse, Nik Swartz, Matt Aro

Excused: Chair Jim Lampe, Jim Byer

Others Present: Shannon Haydin, Public Works Project Manager

Approval of the Minutes
Motion to approve minutes of the April 15, 2015 meeting by Dan Eklof second by Nik Swartz. Motion passed, minutes approved.

Appearances
None

Unfinished Business

A. Update on Lottes Park
a. Lottes Park Punch List

Shannon Haydin reviewed the outstanding items on the Lottes punchlist. There were still a handful of minor items that needed to be taken care of. Shannon Haydin explained that the updated list has been sent to Harmony for completion.

In light of some of the items that were left off of the Lottes Park project (e.g.- LED lighting in all fixtures as suggested by the Committee), the Committee briefly discussed how to ensure the Committee's suggestions were implemented. Jim Busse asked Shannon Haydin to distribute the Facility Committee's project check list and stated that the Committee should take up the topic at the meeting after the new City Administrator has been hired.

New Business- None

Adjournment
Motion by Dan Eklof, Second by Nik Swartz to adjourn. Meeting adjourned at 6:02 pm.

NOTE: Upon reasonable notice, the City of Monona will accommodate the needs of disabled individuals through auxiliary aids or services. For additional information or to request this service, contact Joan Andrusz at (608) 222-2525 (not a TDD telephone number, Fax: (608) 222-9225, or through the City Police Department TDD telephone number 441-0399.

The public is notified that any final action taken at a previous meeting may be reconsidered pursuant to the City of Monona ordinances. A suspension of the rules may allow for final action to be taken on an item of New Business.

It is possible that members of and a possible quorum of members of other governmental bodies of the municipality may be in attendance at the above stated meeting to gather information or speak about a subject, over which they have decision-making responsibility. Any governmental body at the above stated meeting will take no action other than the governmental body specifically referred to above in this notice.

5211 SCHLUTER ROAD MONONA, WI 53716-2598
CITY HALL (608) 222-2525
FAX (608) 222-9225
http://www.mymonona.com

MEMO

To: City of Monona Facilities Committee
From: Brad Bruun, Public Works Project Manager
Date: 2/16/2016
RE: Updates on Facilities Improvements, 2016

Schluter Restroom Facility Improvements
Schluter restroom facility is in the middle of the bidding process. The bid for the facility is wrapped up into one bid package and project manual for the entire Schluter Park Improvement and Stormwater Project. We will be dredging the Schluter Cove and placing two stormwater treatment devices. The parks department will cover the expansion of the beach area and improvements to the walkways and restroom facility.

The restroom facility plan documents to my understanding have not changed since the last review by the Facilities Committee on meeting date 2/11/2015. There was asbestos found in some of the caulk in the restroom facility. It was decided to lay the responsibility of properly disposing of this asbestos would be put on the contractor awarded the project. This created a new bid tab item # 103 on the Sitework bid tab.

Fire, Police, and Public Works Garage LED Retrofit Assessment
It was just recently brought to my attention that the Fire Garage/Bay, Police Garage, and Public Works garage have not had their lighting fixtures updated to LED's. There was a request put in to me to review the options for each garage and find funding to potentially retrofit fixtures with LED's and to look into placing movement sensors in locations in order to save energy. I will be gathering more information and asking the departments to do an audit of lighting fixtures and types in order to have an estimation of cost done. I have already presented this to the City Administrator, April. She considers this a project that would align with the Strategic Plan that was developed recently as well as a project that strictly accomplishes strategies laid out in the Sustainability Plan that was approved in August 2015.

Plan to develop a Suggested Facilities Maintenance and Renovation Schedule
The City has recently had large scale facility audits done including the Bray Study, Trane Study, and Sustainability Plan Annual Report: Energy Benchmarking. Using these studies along with other ancillary information, the Facilities Committee would be tasked with developing a process to derive a suggested maintenance schedule that would include suggested renovations for City facilities. To this point there has been no formal attempt that has been done to summarize the data gathered by these studies into a report that can be used to take a more comprehensive and in depth look at the City's options pertaining to cost effective facility upgrades. Also, routine maintenance schedules have not been considered in some of these studies and to my knowledge have not been audited to make sure that new technologies are being used when necessary and that the City is not neglecting certain necessary maintenance

practices. It will also be necessary to look at O&M costs associated with routine maintenance to see where we are spending too much staff and resources and where we are not spending enough.

DORSCHNER ASSOCIATES

Architecture
Planning

Dorschner|Associates, Inc.
849 E. Washington Ave., Ste. 112
Madison, Wisconsin 53703
Phone: 608.204.0777
Fax: 608.204.0778

MONONA SCHLUTER PARK RESTROOMS
4500 WINNEQUAH ROAD
MONONA, WI 53716

CONSTRUCTION DOCUMENTS

DORSCHNER ASSOCIATES
14013-00

INDEX OF DRAWINGS

RENDERING

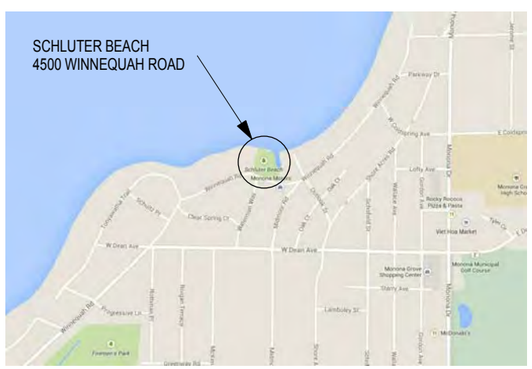

LOCATION MAP

GENERAL	
G100	COVER SHEET
G101	NOTES AND SCHEDULES
G102	NOTES AND SCHEDULES
G103	NOTES AND SCHEDULES
G200	SYMBOLS AND ABBREVIATIONS
G201	SYMBOLS AND ABBREVIATIONS
G202	SYMBOLS AND ABBREVIATIONS
ARCHITECTURAL	
A101	EXTERIOR ELEVATIONS
A102	EXTERIOR ELEVATIONS
A103	EXTERIOR ELEVATIONS
A104	EXTERIOR ELEVATIONS
A105	EXTERIOR ELEVATIONS
A200	FLOOR PLAN
A201	CLERESTORY PLAN
A202	ROOF PLAN
A300	CEILING PLAN
A400	BUILDING SECTIONS
A401	BUILDING SECTIONS
A500	WALL SECTIONS
A501	WALL SECTIONS
A600	EXTERIOR DETAILS
A601	EXTERIOR DETAILS
A602	EXTERIOR DETAILS
A603	EXTERIOR DETAILS
A604	EXTERIOR DETAILS
A605	EXTERIOR DETAILS
A606	EXTERIOR DETAILS
A800	INTERIOR ELEVATIONS
A801	INTERIOR ELEVATIONS
A802	INTERIOR ELEVATIONS

STRUCTURAL	
S000	STRUCTURAL NOTES
S001	STRUCTURAL NOTES
S002	STRUCTURAL NOTES
S003	STRUCTURAL NOTES
S004	STRUCTURAL NOTES
S005	STRUCTURAL NOTES
S006	STRUCTURAL NOTES
S010	STRUCTURAL LEGENDS AND SCHEDULES
S100	FOUNDATION PLAN
S101	ROOF FRAMING PLAN
S200	FOUNDATION DETAILS
S201	FOUNDATION DETAILS
S202	FOUNDATION DETAILS
S300	FRAMING DETAILS
S301	FRAMING DETAILS
S302	FRAMING DETAILS
PLUMBING	
P000	PLUMBING SYMBOLS, ABBREVIATIONS AND DETAILS
P001	PLUMBING SPECIFICATIONS
P002	PLUMBING SPECIFICATIONS
P101	PLUMBING FLOOR PLANS
P102	PLUMBING RISER DIAGRAMS
MECHANICAL	
M100	HVAC SPECIFICATIONS
M101	HVAC FLOOR PLANS, DETAILS AND SCHEDULES
ELECTRICAL	
E100	ELECTRICAL SYMBOLS & SPECIFICATIONS
E101	ELECTRICAL FLOOR PLANS-LIGHTING AND POWER/SYSTEMS
E102	ELECTRICAL DETAILS
E103	ELECTRICAL DETAILS AND SCHEDULES

DATE: 02.16.15

GENERAL CONTRACT NOTES:

1. CONTRACTOR SHALL COMPLY WITH ALL APPLICABLE LOCAL, FEDERAL, AND STATE REGULATIONS, AND ALL OF THE REQUIREMENTS OF THE LOCAL AUTHORITIES HAVING JURISDICTION.

2. THE CONTRACTOR SHALL OBTAIN AND PAY FOR ALL PERMITS, INSPECTION FEES, AND TAXES AS RUQUIRED FOR THEIR PORTION OF THE WORK.

3. THE CONTRACTOR SHALL VISIT THE SITE TO DETERMINE THE FULL EXTENT OF THE WORK AND BECOME FAMILIAR WITH THE LOCAL CONDITIONS AND CODES RELATING TO THE WORK BEFORE SUBMITTIING A PROPOSAL. FAILURE TO DO SO WILL NOT RELIEVE THE CONTRACTOR OF THE OBLIGATIONS OF THE CONTRACT.

4. THE CONTRACTOR SHALL NOTIFY THE ARCHITECT OF ANY DISCREPANCIES IN THE CONTRACT DOCUMENTS, IN WRITING, AND ALLOW SUFFICIENT TIME FROM THE RECEIPT OF NOTIFICATION BY THE ARCHITECT TO FURNISH A CLARIFICATION BEFORE PROCEEDING WITH THE WORK IN QUESTION.

5. THE CONTRACTOR SHALL NOTIFY THE ARCHITECT, IN WRITING, OF ANY DEFICIENCIES RELATED TO LOCAL CODES AND REGULATIONS OR UTILITIES AND ALLOW SUFFICIENT TIME FROM THE RECEIPT OF NOTIFICATION BY THE ARCHITECT TO FURNISH A REVISION OF CLARIFICATION.

6. THE CONTRACTOR WILL ALLOW 7 CALENDAR DAYS FROM THE DATE OF RECEIPT BY THE ARCHITECT FOR RESPONSES TO REQUESTS FOR INFORMATION.

7. THE CONTRACTOR SHALL FURNISH SUBMITTALS FOR ALL BUILDING COMPONENTS AND ACCESSORIES NECESSARY FOR THE INSTALLATION OF EACH BUILDING COMPONENT LISTED IN THE BUILDING COMPONENTS SECTION OF THESE DRAWINGS.

8. THE CONTRACTOR SHALL FURNISH SHOP DRAWINGS FOR WORK REQUIRING SHOP FABRICATION FOR THE ARCHITECT TO REVIEW. THE CONTRACTOR SHALL ALLOW 10 CALENDAR DAYS FROM THE DATE OF RECEIPT BY THE ARCHITECT FOR REVIEW OF THE SHOP DRAWINGS.

9. CONTRACTOR SHALL APPLY, INSTALL, CONNECT, ERECT, USE, CLEAN AND CONDITION MANUFACTURED ARTICLES, MATERIALS, AND EQUIPMENT AS RECOMMENDED BY THE MANUFACTURER, UNLESS SPECIFIED TO THE CONTRARY. tHE MANUFACTURER'S LATEST RECOMMENDATIONS AT THE TIME OF BIDDING SHALL BE USED.

10. CONTRACTOR TO PROVIDE SUBMITTALS FOR ALL DOOR HARDWARE

BUILDING COMPONENTS

BUILDING COMPONENT	DESCRIPTION
CONCRETE MASONRY CMU #1	DESIGN BASIS: COUNTY MATERIALS SPLIT FACE DECORATIVE CONCRETE MASONRY UNIT COLOR 64-121B (OR EQUAL)
CONCRETE MASONRY CMU #2	DESIGN BASIS: COUNTY MATERIALS SPLIT FACE DECORATIVE CONCRETE MASONRY UNIT COLOR 64-072A (OR EQUAL)
CONCRETE MASONRY CMU #3	DESIGN BASIS: COUNTY MATERIALS STANDARD GRAY CONCRETE MASONRY UIT (OR EQUAL) INTERIOR WALLS ONLY
CONCRETE MASONRY UNIT SEALER	PROSCO BLOCK-GUARD AND GRAFFITI CONTRO II-WATER BASED SILICONE EMULSION BLOCK SEALER
CEDAR FRAMING AND TRIM	1" NOM WRC BOARDS ROUGH TEXTURE GRADE A CLEAR ATTACH TO SUBSTRATE WITH STAINLESS STEEL FASTNERS FINISH WITH ST1
ROOF ASSEMBLY #1	DESIGN BASIS: GAF TIMBERLINE HD SERIES-LIFETIME WARRANTY SHINGLES, COLOR-SELECTED BY ARCHITECT SUBSTRATE 30# ROOFING FELT ON 1/2" OSB SCREWED TO 2X6 NOM T&G WOOD EXPOSED ROOF DECKING. ROOFING NAILS MUST NOT EXPOSE OR SPAWL ON UNDERSIDE OF ROOF
CEDAR SIDING	1X4 NOM WRC SHIPLAP SIDING SMOOTH TEXTURE GRADE A CLEAR ATTACH TO SUBSTRATE WITH STAINLESS STEEL FASTNERS FINISH WITH ST1
METAL FLASHING	PREFORMED SHEET METAL PROFILES: MATERIAL 24 GA. GALVANIZED STEEL COLOR TO BE SELECTED BY ARCHITECT
METAL GUTTER #1	PROVIDE PREFORMED "K" STYLE CONT. 5" SHEET METAL GUTTER AND ATTACHMENTS. CONTINUOUS GUTTER GUARD MATERIAL 24 GA. GALVANIZED STEEL COLOR SELECTED BY ARCHITECT
METAL DOWNSPOUT	24 GA. 4" PLAINSMOOTH ROUND GALVANIZED STEEL DOWNSPOUT WITH GALVANIZED STEEL ELBOWS AND GALVANIZED STEELWIRE STRAINER COLOR SELECTED BY ARCHITECT
POLYCARBONATE GLAZING	DESIGN BASIS: MIDLAND PLASTICS 3/8" CLEAR POLYCARBONATE SHEET MATERIAL (OR EQUAL)
FLOOR FINISH SYSTEM #1	DESIGN BASIS: DURAFLEX "DUR-A-QUARTZ" EPOXY FLOOR SYSTEM WITH STANDARD SLIP RESISTANT TEXTURE (OR EQUAL) WITH POLYASPARTIC CHEMICAL RESITANT COATING OR EQUAL AND 6" COVED BASE
TOILET COMPARTMENTS	HIGH DENSITY POLYETHYLENE TOILET PARTITIONS-DESIGN BASIS: BRADLEY CORP "BRADMAR SERIES 400" (OR EQUAL) OVERHEAD BRACED URINAL SCREEN TO BE 48" HIGH

BUILDING COMPONENT	DESCRIPTION
WARM AIR DRYER	XLERATOR XL-GR GRAPHITE TEXTURED PAINTED
GRAB BARS	18 GA. TYPE 304 STAINLESS STEEL GRAB BARS WITH CONCEALED FASTNERS SATIN FINISH SIZE AND LOCATION PER ANSI 117.1 SEE G102 FOR MOUNTING HEIGHTS
BABY CHANGING STATION	KOALA CARE KB2200-SS
EXHAUST ENCLOSURE #1	CEDAR BEVEL SIDING ON 5/8" TREATED PLYWOOD ON 2X4 AT 16" O.C. 1X4 WRC TRIM AT CORNERS
COVE BASE	6" EPOXY COVE BASE CONTINUOUS ALUMINUM TRIM AT TOP
SS MIRROR	STAINLESS STEEL FRAMED MIRROR BOBRICK MODEL B-165 2436
MECHANICAL LOUVER	8" TALL BY 48" WIDE GALVANIZED STEEL MECHANICAL LOUVER WITH BUG SCREEN PAINT FINISH TO BE SELECTED BY ARCHITECT FROM MANUFACTURERS FULL RANGE
WALL TYPE #1	2X4 AT 16" ON CENTER TREATED 1/2" PLYWOOD SHEATHING EACH SIDE
WALL TYPE #2	2X4 AT 16" ON CENTER TREATED 1/2" PLYWOOD SHEATHING ONE SIDE ONLY
CAST ALUMINUM SIGN	PROVIDE CAST ALUMINUM BATHROOM SIGNAGE WITH TACTILE CHARACTERS, PICTOGRAMS AND BRAILLE COMPLIANT WITH ANSI A117.1 ATTACH TO WALL WITH TAMPER RESISTANT FASTNERS-COORDINATE SIGNAGE CONTENT WITH ROOM FUNCTION SUBMIT TO ARCHITECT FOR APPROVAL MAXIMUM SIGN HEIGTH TO BE 8" TO FIT WITHIN SMOOTH BLOCK
SEALANT AND BACKER ROD	VERTICAL JOINT SEALANT: ONE PART POLYURETHANE, TWO PARTS POLYMER, OR ONE PART LOW MODULUS SILICAONE SEALANTS AT ALL EXTERIOR AND INTERIOR VERTICAL SEALANT JOINTS. HORIZONTAL JOINT SEALANT: 2 PART SELF- LEVELING POLYURETHANE CLOSED CELL BACK-UP (BACKER ROD): ASTM C1130, TYPE C
TRENCH DRAIN	CAST IRON TRENCH DRAIN PAN WITH GRATED COVER SIM NEENAH R-4995-A2 SET FLUSH WITH CONCRETE SEE DETAIL 1/A606

DORSCHNER ASSOCIATES

Architecture
Planning

Dorschner|Associates, Inc.
849 E. Washington Ave., Ste. 112
Madison, Wisconsin 53703

ISSUED

02.16.15 CONSTRUCTION DOCUMENTS

PROJECT
MONONA SCHLUTER PARK RESTROOMS
4500 WINNEQUAH ROAD
MONONA, WI 53716

PROJECT NO.
14013-00

DRAWING
NOTES AND SCHEDULES

DATE
02.16.15

G101

ROOM SCHEDULE

Room Schedule							
Number	**Name**	**Area**	**Wall Finish**	**Floor Finish**	**Ceiling Finish**	**Base Finish**	**Remarks**
100	WOMEN	160 SF	PT #1 & PT #3	FLOOR FINISH SYSTEM #1	EXPOSED/ST1	6" COVE	3
101	MEN	160 SF	PT #1 & PT #3	FLOOR FINISH SYSTEM #1	EXPOSED/ST1	6" COVE	3
102	CHANGING	49 SF	PT #1 & PT #3	FLOOR FINISH SYSTEM #1	EXPOSED/ST1	6" COVE	3
103	UTILITY	61 SF		SMOOTH SEALED CONCRETE	EXPOSED/ST1		1 & 2

FINISH NOTES

1. APPLY A CONCRETE MASONRY UNIT SEALER TO EXTERIOR SURFACES OF CMU-SEE BUILDING COMPONENTS FOR DESIGN BASIS PRODUCTR
2. APPLY A CMU BLOCK FILLER TO INTERIOR BLOCK WALLS PRIOR TO PRIMING AND PAINTING
3. APPLY A COMPATIBLE PRIMER TO INTERIOR WALLS AND HM DOORS PRIOR TO FIELD PAINTING
4. DO NOT PAINT ELECTRICAL CONDUIT
5. ALL UNTREATED WOOD MEMBERS AND SIDING ARE TO RECEIVE FINISH: ST #1
6. ALL TREATED WOOD MEMBERS, TREATED TRIM AND LVL'S TO RECEIVE FINISH: ST #2
7. PROVIDE DRAW DOWN SAMPLES FOR ALL LATEX PAINT FINISHES
8. PROVIDE STAINED WOOD SAMPLES FOR ALL STAIN FINISHES
9, ALL INTERIOR CMU WALLS TO BE PAINTED PT #1 UNLESS NOTED OTHERWISE
10. FIELD PAINT ALL HOLLOW METAL DOORS PT #2
11. STAIN SURFACES OF WOOD FRAMING MEMBERS PRIOR TO CONCEALING WITHIN MASONRY CAVITIES WHERE APPLICABLE
12. PRE-STAIN ROOF DECK PRIOR TO INSTALLATION OF THREE SIDES: EXPOSED SIDE AND TONGUE AND GROOVE SIDES

FINISH DESIGNATIONS

PT #1: EXTERIOR ACRYLIC LATEX SATIN SHEEN; COLOR: SW 6246 NORTH STAR-MANUFACTURED BY SHERWIN WILLIAMS 1 COAT BLOCK SURFACE FILLER 2 COATS ACRYLIC GLOSS
PT #2" SATIN SHEEN LATEX BASE ENAMEL; COLOR: SW 6244 NAVAL-MANUFACTURED BY SHERWIN WILLIAMS 1 COAT ACRYLIC PRIMER 2 COATS ACRYLIC ENAMEL
PT #3: EXTERIOR ACRYLIC LATEX SATIN SHEEN; COLOR: SW 6249 STORM CLOUD-MANUFACTURED BY SHERWIN WILLIAMS 1 BLOCK SURFACE FILLER 2 COATS ACRYLIC GLOSS
ST #1: EXTERIOR POLYURETHAND SEMI-TRANSPARENT STAIN; COLOR: SW 3513 SPICE CHEST-MANUFACTURED BY SHERWIN WILLIAMS ONE COAT STAIN 2 COATS CLEAR POLYURETHANE
ST #2: EXTERIRO SOLID COLOR ACRYLIC STAIN; COLOR: SW 3007 LODGE BROWN-MANUFACTURED BY SHERWIN WILLIAMS ONE COAT STAIN 2 COATS CLEAR POLYURETHANE
IPE: OIL, PRIME COAT: AUSTRALIAN TIMBER OIL, ALL CUT ENDS PRIME WITH ONE COAT OF U-C COATINGS, AND ONE COAT OF ANCHORSEAL WITHIN 24 HOURS OF CUT.

*REMARKS (SEE ROOM SCHEDULE)

1. LEAVE INTERIOR CONCRETE BLOCK BARE AND UNFINISHED
2 APPLY WATERPROOF ACRYLIC SEALER TO CONCRETE FLOOR
3. PT #3 ON WET WALL, REMAINING WALLS PT #1

*REMARKS ONLY APPLY WHERE NOTED ON ROOM SCHEDULE

DORSCHNER ASSOCIATES

Architecture
Planning

Dorschner|Associates, Inc.
849 E. Washington Ave., Ste. 112
Madison, Wisconsin 53703

ISSUED

02.16.15 CONSTRUCTION DOCUMENTS

PROJECT
MONONA SCHLUTER PARK RESTROOMS
4500 WINNEQUAH ROAD
MONONA, WI 53716

PROJECT NO.
14013-00

DRAWING
NOTES AND SCHEDULES

DATE
02.16.15

DOOR SCHEDULE

DOOR SCHEDULE												
		DOOR			DOOR		FRAME	FRAME	FRAME	FRAME		
DOOR NUMBER	ROOM NAME	W	H	T	MATERIAL	Finish	MATERIAL	HEAD	JAMB	SILL	HARDWARE	REMARKS
100	WOMEN	3' - 0"	7' - 0"	1 3/4"	HM	PT #2	HM				1	1
101	MEN	3' - 0"	7' - 0"	1 3/4"	HM	PT #2	HM				1	1
103	UTILITY	3' - 0"	7' - 0"	1 3/4"	HM	PT #2	HM				2	1
104	CHANGING	3' - 0"	7' - 0"	1 3/4"	HM	PT #2	HM				3	1

DOOR NOTES:

GENERAL NOTES:

1. ALL DOORS TO BE FULLY WELDED, GALVANIZED HOLLOW METAL DOORS WITH 16 GA. FACE SKINS AND STEEL STIFFENERS SIMILAR TO CURRIES 747 SERIES DOOR CONSTRUCTION-FACTORY PRIME AND FIELD PAINT.
2. ALL DOOR FRAMES TO BE FULLY WELDED,14 GA. GALVANIZED STEEL-FACTORY PRIME AND FIELD PAINT- GROUT SOLID
3. DOOR HARDWARE COMPATIBILITY TO BE VERIFIED BY GC
4. COORDINATE DOOR FUNCTION AND TIMER SETTINGS OF ELECTRIC DOOR HARDWARE WITH OWNER
5. HARDWARE SUBSTITUTES TO BE APPROVED BY ARCHITECT PRIOR TO SUBMITTAL
6. DOORS AND FRAMES TO BE SHOP PRIMED AND FIELD PAINTED

REMARKS (SEE DOOR SCHEDULE)

1. PROVIDE 12"H X 18"W HOT DIPPED GALVANIZED STEEL TRANSFER GRILL WITH BUG SCREEN IN DOOR-PAINT TO MATCH DOOR

HARDWARE GROUP 1:
HINGES: HAGER FULL MORTISE-AB850-4 1/2", STAINLESS STEEL WITH NON-REMOVABLE STAINLESS STEEL PIN, 3 PER DOOR
CLOSER: SARGENT 351 SERIES, FINISH 26D/626
MORTISE LOCK: ACCURATE LOCK AND HARDWARE 8500/8600 SERIES
LOCK FUNCTION: XR-CLASSROOM FUNCTION-ALWAYS ALLOW EGRESS PASSAGE NO THUMBTURN FOR DEADBOLT; INGRESS BY PUBLIC DURING PARK HOURS BY DISENGAGED ELECTRIC STRIKE; NO OUTSIDE TRIM-PUSH PLATE ONLY
LOCK CYLINDER: STANLEY BEST-TO MATCH OWNERS EXISTING KEYING SYSTEM
DOOR TRIM: 32D/630 SATIN STAINLESS STEEL LEVER AND ROSE-SIM SARGENT "BJ LEVER" AT INTERIOR ONLY
ELECTRIC STRIKE AND POWER SUPPLY: FOLGER ADAM 310 SERIES AND COMPATIBLE POWER SUPPLY-FAIL SECURE
SILENCERS: DON-JO 1608 GRAY RUBBER
DOOR SWEEP: PEMKO 36" (PEM-P18062CNB36)
ACCESSORIES: STAINLESS STEEL 8"X12" PUSHPLATE WITH KEY CYLINDER AT EXTERIOR

HARDWARE GROUP 2:
HINGES: HAGER FULL MORTISE-AB850-4 1/2", STAINLESS STEEL WITH NON-REMOVABLE STAINLESS STEEL PIN, 3 PER DOOR
CLOSER: SARGENT 351 SERIES, FINISH 26D/626
MORTISE LOCK: ACCURATE LOCK AND HARDWARE 8500/8600 SERIES
LOCK FUNCTION: STOREROOM FUNCTION
LOCK CYLINDER: STANLEY BEST-TO MATCH OWNERS EXISTING KEYING SYSTEM
DOOR TRIM: 32D/630 SATIN STAINLESS STEEL LEVER AND ROSE-SIM SARGENT "BJ LEVER"
SILENCERS: DON-JO 1608 GRAY RUBBER
DOOR SWEEP: PEMKO 36" (PEM-P18062CNB36)
ACCESSORIES: PROVIDE ALUMINUM RAINDRIP
KICK STOP: OFCI

HARDWARE GROUP 3:
HINGES: HAGER FULL MORTISE-AB850-4 1/2", STAINLESS STEEL WITH NON-REMOVABLE STAINLESS STEEL PIN, 3 PER DOOR
CLOSER: SARGENT 351 SERIES, FINISH 26D/626
MORTISE LOCK: ACCURATE LOCK AND HARDWARE 8500/8600 SERIES
LOCK FUNCTION: XR-CLASSROOM FUNCTION-ALWAYS ALLOW EGRESS PASSAGE NO THUMBTURN FOR DEADBOLT; INGRESS BY PUBLIC DURING PARK HOURS BY DISENGAGED ELECTRIC STRIKE; NO OUTSIDE TRIM-PUSH PLATE ONLY
LOCK CYLINDER: STANLEY BEST-TO MATCH OWNERS EXISTING KEYING SYSTEM
DOOR TRIM: 32D/630 SATIN STAINLESS STEEL LEVER AND ROSE-SIM SARGENT "BJ LEVER" AT INTERIOR ONLY
ELECTRIC STRIKE AND POWER SUPPLY: FOLGER ADAM 310 SERIES AND COMPATIBLE POWER SUPPLY-FAIL SECURE
SILENCERS: DON-JO 1608 GRAY RUBBER
DOOR SWEEP: PEMKO 36" (PEM-P18062CNB36)
ACCESSORIES: STAINLESS STEEL 8"X12" PUSHPLATE WITH KEY CYLINDER AT EXTERIOR
DEADBOLT: AS SELECTED BY OWNER

CODE SUMMARY

APPLICABLE CODES:
WISCONSIN COMMERCIAL BUILDING CODE 2011-(BASED ON 2009 INTERNATIONAL BUILDING CODE WITH WISCONSIN AMENDMENTS-SPS 361 AND 362)

2009 INTERNATIONAL ENERGY CONSERVATION CODE WITH WISCONSIN AMENDMENTS (SPS 363)

2006 INTERNATIONAL MECHANICAL CODE WITH WISCONSIN AMENDMENTS (SPS 364)

2006 INTERNATIONAL FUEL GAS CODE WITH WISCONSIN AMENDMENTS (SPS 365)

2008 WISCONSIN PLUMBING CODE-SPS 381-387

WISCONSIN STATE ELECTRICAL CODE-COMM 316

CLASS OF CONSTRUCTION:
TYPE VB

OCCUPANCY:
UTILITY AND MISCELLANEOUS GROUP (U)

BUILDING AREA:
987 GROSS SQUARE FEET (INCLUDES CONCRETE PLATFORM)

DORSCHNER ASSOCIATES
Architecture
Planning

Dorschner|Associates, Inc.
849 E. Washington Ave., Ste. 112
Madison, Wisconsin 53703

ISSUED
02.16.15 CONSTRUCTION DOCUMENTS

PROJECT
MONONA SCHLUTER PARK RESTROOMS
4500 WINNEQUAH ROAD
MONONA, WI 53716

PROJECT NO.
14013-00

DRAWING
NOTES AND SCHEDULES

DATE
02.16.15

TOILET ACCESSORY SCHEDULE:

ABBREVIATION	STD. MOUNTING HEIGHT
AP	SEE PLAN AND ELEVATION
CHW	(1) 5'-6" A.F.F., (1)4'-0" A.F.F. SEE ELEVATIONS FOR OTHER LOCATIONS
EWC	(1) 2'-11" A.F.F. TO SPOUT OUTLET, (1) 3'-5" A.F.F. TO SPOUT OUTLET
ED	TOP @ 41.25" MALE, 38.25" FEMALE
FD	SEE PLUMBING SPECIFICATION
FS	TOP @ 17-19" A.F.F.
GB8	CENTER @ 2'-10" A.F.F., 3'-2" A.F.F. IN SHOWER
GB18	HORIZ: CENTER @ 2'-10" A.F.F.; VERT: 3'-4" @ B.O. BAR HORIZ: CENTER @ 3'-2" A.F.F., VERT: 3'-7" @ B.O. BAR IN SHOWER
GB36	CENTER @ 2'-10" A.F.F., 3'-2" A.F.F. IN SHOWER
GB48	CENTER @ 2'-10" A.F.F., 3'-2" A.F.F. IN SHOWER
GB60	CENTER @ 2'-10" A.F.F., 3'-2" A.F.F. IN SHOWER
LAV	TYPICAL: TOP @ 2'-10" A.F.F. PRESCHOOL: TOP @ 1'-8" A.F.F.
M	BOTTOM @ 3'-4" MAX A.F.F.
SD	TOP @ 48" A.F.F.
SDL	LAVATORY MOUNTED
SND	48" A.F.F. MAX TO OPERATING COMPONENTS (SEE PLAN)
SNL	TOP @ 15" MIN, 48" MAX A.F.F.
TD	48" A.F.F. MAX. TO OPERATING COMPONENTS (SEE PLAN)
TPH	OUTLET 15" MIN, 48" MAX A.F.F., 7-9" IN FRONT OF WC TO CL (SEE PLAN)
WC	SEE PLUMBING
WR	TOP @41-45" A.F.F. MAX., BASED ON SPECIFIED PRODUCT (SEE PLAN)

HATCH PATTERNS / MATERIAL SYMBOLS:

TYPICAL HATCH PATTERN / MATERIAL NOTES. UNLESS REQUIRED OTHERWISE:
1. PATTERNS ARE WITHOUT LIMITATION, ILLUSTRATIVE OF MATERIAL SCOPE, WHERE SHOWN
2. NOT ALL SCOPE IS SHOWN WITH PATTERNS OR SYMBOLS. COORDINATE WITH DRAWING AND SPECIFICATION.

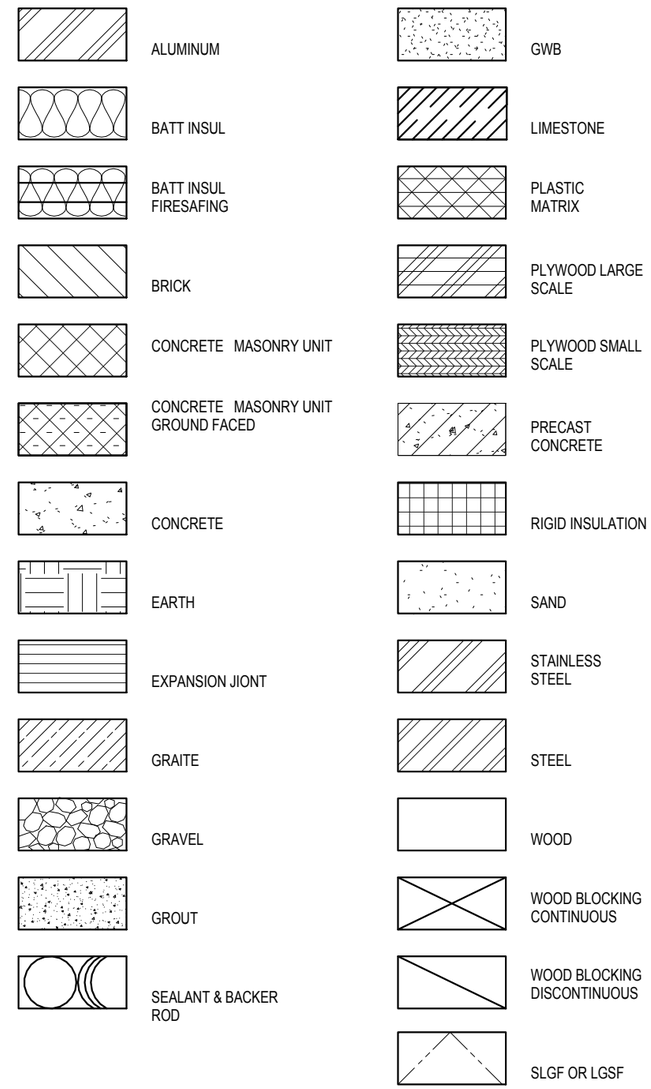

DORSCHNER ASSOCIATES

Architecture
Planning

Dorschner|Associates, Inc.
849 E. Washington Ave., Ste. 112
Madison, Wisconsin 53703

ISSUED

02.16.15 CONSTRUCTION DOCUMENTS

PROJECT
MONONA SCHLUTER PARK RESTROOMS
4500 WINNEQUAH ROAD
MONONA, WI 53716

PROJECT NO.
14013-00

DRAWING
SYMBOLS AND ABBREVIATIONS

DATE
02.16.15

G200

PROJECT ABBREVIATIONS:

ADA	AMERICANS WITH DISABILITIES ACT
A/C	AIR CONDITIONING
ACT	ACOUSTICAL CEILING TILE
ADD	ADDENDUM/ ADDITION(AL)
ADJ	ADJACENT
AFF	ABOVE FINISHED FLOOR
AL	ALUMINUM
ALT	ALTERNATE(ING)
ANOD	ANODIZED
AP	ACCESS PANEL
APPROX	APPROXIMATE
AVG	AVERAGE
BB	BULLETIN BOARD
BD	BOARD
BLDG	BUILDING
BLKG	BLOCKING
BM	BEAM
B.O.	BOTTOM OF
BRG	BEARING
BYND	BEYOND
CAB	CABINET
CC	CORNER GUARD
CHW	CLOTHES HOOK MOUNTED ON WALL
CJ	CONTROL JOINT
CL	CENTER LINE
CLG	CEILING
CLR	CLEAR(ANCE)
CMU	CONCRETE MASONRY UNIT
CO	CLEAN-OUT
COL	COLUMN
CONC	CONCRETE
CONST	CONSTRUCTION
CONT	CONTINUOUS, CONTINUE
CORR	CORRIDOR
CRS	COURSE
CPT	CARPET
CT	CERAMIC TILE
CTR	CENTER
CUH	CABINET UNIT HEATER
CW	CURTAINWALL
DBL	DOUBLE
DIA	DIAMETER
DIAG	DIAGONAL
DIM	DIMENSION
DN	DOWN
DR	DOOR
DTL	DETAIL
DW	DISH WASHER
DWG	DRAWING
DWR	DRAWER
E	EAST
EA	EACH
EJ	EXPANSION JOINT
ED	ELECTRIC HAND DRYER
EL	ELEVATION
ELEC	ELETRICAL
ELEV	ELEVATOR
EMER	EMERGENCY
EP	ELECTRIC PANELBOARD
EPDM	ETHYLENE PROPYLENE DIENE MONOMER
EQ	EQUAL
EXST	EXISTING
EXT	EXTERIOR
EWC	ELECTRIC WATER COOLER
EWH	ELECTRIC WALL HEATER
FA	FIRE ALARM
FD	FLOOR DRAIN
FIXT	FIXTURE
FLOUR	FLUORESCENT
FLR	FLOOR
FND	FOUNDATION
FO	FACE OF
FOB	FACE OF BRICK
FOC	FACE OF CENTER
FOF	FACE OF FINISH
FOM	FACE OF MASONRY
FRT	FIRE RETARDANT TREATMENT
FS	FOLDING SHOWER SEAT
FTG	FOOTING
FX-#	FIRE EXTINGUISHER AND CABINET - TYPE
GA	GAUGE
GALV	GALVANIZED
GB	GRAB BAR
GL	GLASS, GLAZING
GWB	GYPSUM WALL BOARD
HB	HOSE BIBB
HCP	HANDICAPPED
HM	HOLLOW METAL
HORIZ	HORIZONTAL
HM	HOLLOW METAL
HT	HEIGHT
HVAC	HEATING/VENTILATING/AIR CONDITIONING
HB	HOSE BIBB
HCP	HANDICAPPED
HM	HOLLOW METAL
HORIZ	HORIZONTAL
HM	HOLLOW METAL
HT	HEIGHT
HVAC	HEATING/VENTILATING/AIR CONDITIONING
ID	INSIDE DIAMETER
IN	INCH
INCL	INCLUDE(D), (ING)
INFO	INFORMATION
INSUL	INSULATE(D), (ION)
INT	INTERIOR
INV	INVERT
JAN	JANITOR
JT	JOINT
KIT	KITCHEN
KO	KNEE OPENING
LAV	LAVATORY
LVL	LEVEL
LP	LOW POINT
M	MIRROR
MAX	MAXIMUM
MECH	MECHANICAL
MIN	MINIMUM
MISC	MISCELLANEOUS
MB	MARKER BOARD
MO	MASONRY OPENING
MTL	METAL
N	NORTH
NA	NOT APPLICABLE
NIC	NOT IN CONTRACT
ND	NON-OPERATIONAL DOOR
NRC	NOISE REDUCTION
NTS	NOT TO SCALE
OA	OVERALL
OC	ON CENTER(S)
OD	OUTSIDE DIAMETER
OFCI	OWNER FURNISHED CONTRACTOR INSTALLED
OFOI	OWNER FURNISHED OWNER INSTALLED
OPNG	OPENING
OPP	OPPOSITE
OPP HD	OPPOSITE HAND
PC	PRECAST CONCRETE
PERF	PERFORATE(D)
PL	PLATE
PLAM	PLASTIC LAMINATE
PLWD	PLYWOOD
PNL	PANEL
PSF	POUNDS PER SQUARE FOOT
PSI	POUNDS PER SQUARE INCH
PT	PRE-TREATED
PVC	POLY-VINYL CHLORIDE
QT	QUARRY TILE
RCP	REFLECTED CEILING PLAN
RD	ROOF DRAIN
REF	REFRIGERATOR
REINF	REINFORCE(D), (ING)
REQD	REQUIRED
REV	REVERSE
RM	ROOM
RO	ROUGH OPENING
S	SOUTH
SD	WALL MOUNTED SOAP DISPENSER
SDL	LAVATORY MOUNTED SOAP DISPENSER
SDT	STATIC DISSIPATIVE TILE
SECT	SECTION
SF	SQUARE FOOT (FEET)
SHT	SHEET
SIM	SIMILAR
SLS	SOLID SURFACE
SND	SANITARY NAPKIN DISPENSER
SNL	SANITARY NAPKIN DISPOSAL
SOG	SLAB ON GRADE
SPEC	SPECIFICATION
SPKR	SPEAKER
SQ	SQUARE
SS	STAINLESS STEEL
ST	STAIR
STC	SOUND TRANSMISSION CLASS
STD	STANDARD
STL	STEEL
SUSP	SUSPENDED
SYS	SYSTEM
TB	TACK BOARD
T&B	TOP AND BOTTOM
T&G	TONGUE AND GROOVE
TC	TERRA COTTA
TD	TOWEL DISPENSER
TEL	TELEPHONE
TEMP	TEMPORARY/TEMPERED
THK	THICKNESS
TYP	TYPICAL
TZO	TERRAZZO
UL	UNDERWRITERS LABORATORIES
UC	UNDERCUT
UNO	UNLESS NOTED OTHERWISE
UW	WALL MOUNTED URINAL
VCT	VINYL COMPOSITION TILE
VERT	VERTICAL
VIF	VERIFY IN FIELD
VIN	VINYL
W	WEST, WIDTH, WIDE
WC	WATER CLOSETS
WD	WOOD
WH	WATER HEATER
WHY	WALL HYDRANT
WP	WATER PROOFING
WPT	WORK POINT
WR	WASTE RECEPTICLE
W/	WITH
W/O	WITHOUT

DORSCHNER ASSOCIATES

Architecture
Planning

Dorschner|Associates, Inc.
849 E. Washington Ave., Ste. 112
Madison, Wisconsin 53703

ISSUED

02.16.15 CONSTRUCTION DOCUMENTS

PROJECT
MONONA SCHLUTER PARK RESTROOMS
4500 WINNEQUAH ROAD
MONONA, WI 53716

PROJECT NO.
14013-00

DRAWING
SYMBOLS AND ABBREVIATIONS

DATE
02.16.15

GENERAL ARCHITECTURAL SYMBOLS:

DETAIL REFERENCE
SHEET REFERENCE - TOP OF BUBBLE
DETAIL NUMBER - BOTTOM OF BUBBLE

WALL SECTION REFERENCE
SHEET REFERENCE - TOP OF BUBBLE
DETAIL NUMBER - BOTTOM OF BUBBLE

BUILDING SECTION REFERENCE
SHEET REFERENCE - TOP OF BUBBLE
DETAIL NUMBER - BOTTOM OF BUBBLE

CALL OUT REFERENCE
SHEET REFERENCE - TOP OF BUBBLE
DETAIL NUMBER - BOTTOM OF BUBBLE

INTERIOR ELEVATION REFERENCE

EXTERIOR ELEVATION REFERENCE

PARTITION TYPE REF. SEE SHEET AXXXX

NEW WALLS

WINDOW TYPES SEE XXXX

1 HOUR FIRE RATED WALL

2 HOUR FIRE RATED WALL

NEW DOOR SWING W/ NUMBER SEE XXXX

EXISTING DOOR SWING

REQUEST FOR INFORMATION (RFI) SYMBOL AND ADDENDUM (ADD) SYMBOL

CONSTRUCTION BULLETIN (CB) SYMBOL

REVISION CLOUD

FX-1 — RECESSED FIRE EXTINGUISHER

FX-2 — SURFACE MOUNT FIRE EXTINGUISHER

FX-3 — SURFACE MOUNT FIRE EXTINGUISHER, HOOK MOUNTED

x70-1 — SPOT ELEVATION (FEET-INCHES)

x70-83 — SPOT ELEVATION (FEET-DECIMAL)

OFFICE B 12 — ROOM NAME & NUMBER. SEE ROOM FINISH SCHEDULE SHEETS AXXX THROUGH AXXX

KEY NOTE

DEMOLITION

ACCESSIBILITY SYMBOLS:

ADA ACCESSIBLE ROUTE

ADA ACCESSIBLE ENTRANCE/ EXIT OR PATH

BUILDING EXIT AND EXIT CAPACITY

DORSCHNER ASSOCIATES

Architecture
Planning

Dorschner|Associates, Inc.
849 E. Washington Ave., Ste. 112
Madison, Wisconsin 53703

ISSUED

02.16.15 CONSTRUCTION DOCUMENTS

PROJECT
MONONA SCHLUTER PARK RESTROOMS
4500 WINNEQUAH ROAD
MONONA, WI 53716

PROJECT NO.
14013-00

DRAWING
SYMBOLS AND ABBREVIATIONS

DATE
02.16.15

G202

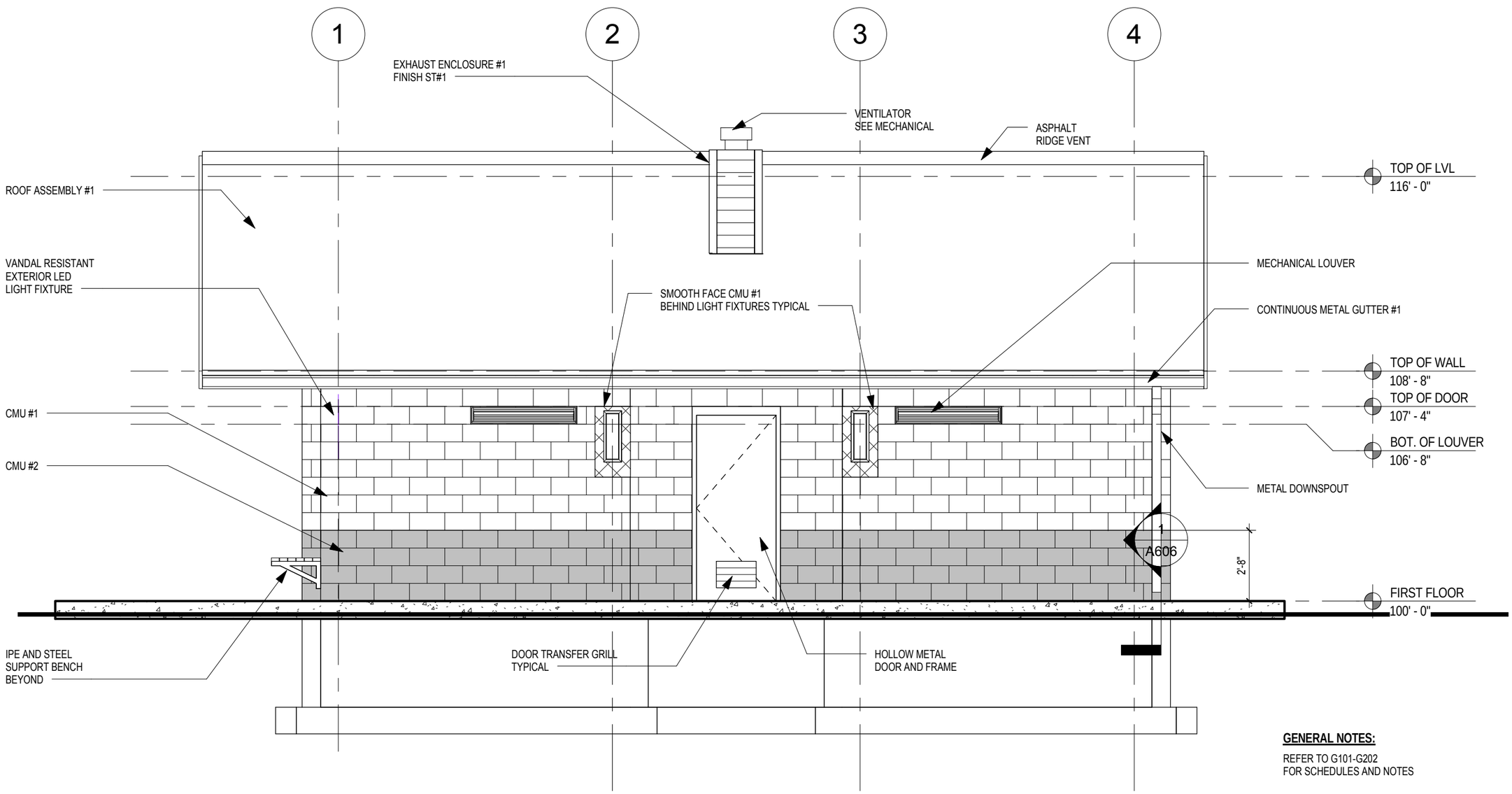

GENERAL NOTES:

REFER TO G101-G202
FOR SCHEDULES AND NOTES

1 WEST ELEVATION

1/4" = 1'-0"

DORSCHNER ASSOCIATES

Architecture
Planning

Dorschner|Associates, Inc.
849 E. Washington Ave., Ste. 112
Madison, Wisconsin 53703

ISSUED

02.16.15 CONSTRUCTION DOCUMENTS

PROJECT
MONONA SCHLUTER PARK
RESTROOMS
4500 WINNEQUAH ROAD
MONONA, WI 53716

PROJECT NO.
14013-00

DRAWING
EXTERIOR ELEVATIONS

DATE
02.16.15

A101

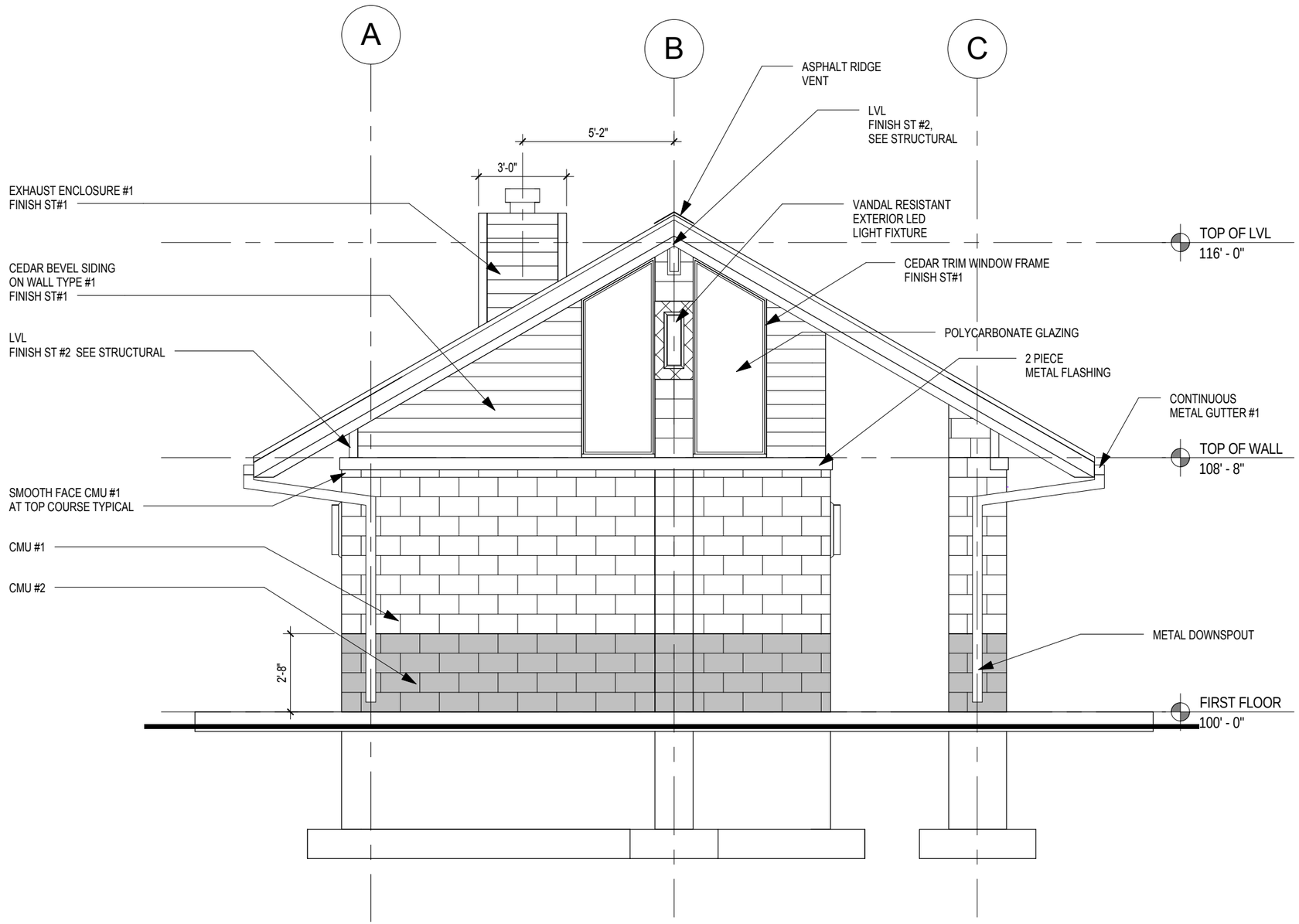

1 SOUTH ELEVATION

1/4" = 1'-0"

GENERAL NOTES:

REFER TO G101-G202
FOR SCHEDULES AND NOTES

DORSCHNER ASSOCIATES

Architecture
Planning

Dorschner|Associates, Inc.
849 E. Washington Ave., Ste. 112
Madison, Wisconsin 53703

ISSUED

02.16.15 CONSTRUCTION DOCUMENTS

PROJECT
MONONA SCHLUTER PARK RESTROOMS
4500 WINNEQUAH ROAD
MONONA, WI 53716

PROJECT NO.
14013-00

DRAWING
EXTERIOR ELEVATIONS

DATE
02.16.15

A102

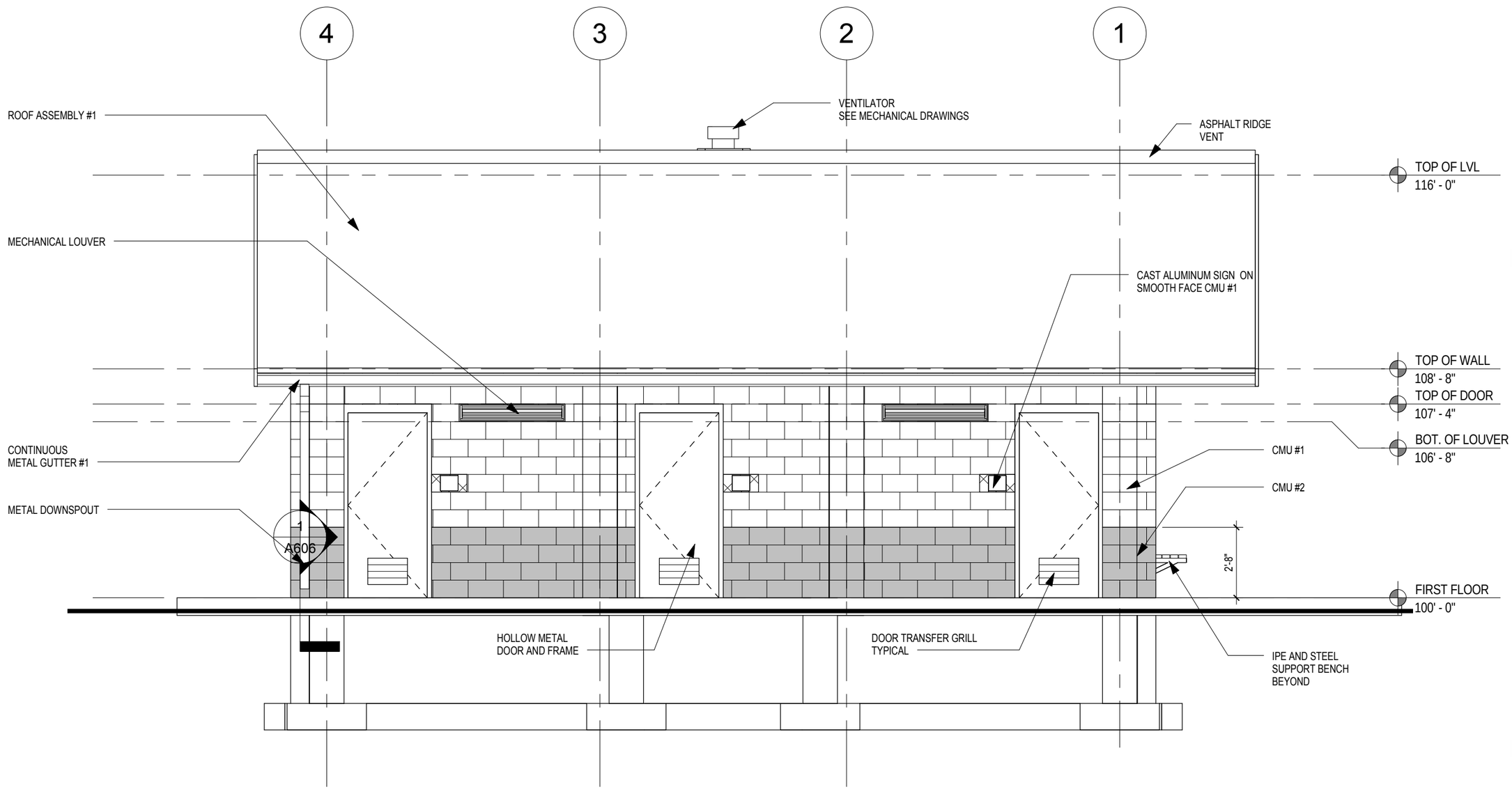

1 EAST ELEVATION

1/4" = 1'-0"

GENERAL NOTES:

REFER TO G101-G202
FOR SCHEDULES AND NOTES

DORSCHNER ASSOCIATES

Architecture
Planning

Dorschner|Associates, Inc.
849 E. Washington Ave., Ste. 112
Madison, Wisconsin 53703

ISSUED

02.16.15 CONSTRUCTION DOCUMENTS

PROJECT
MONONA SCHLUTER PARK
RESTROOMS
4500 WINNEQUAH ROAD
MONONA, WI 53716

PROJECT NO.
14013-00

DRAWING
EXTERIOR ELEVATIONS

DATE
02.16.15

A103

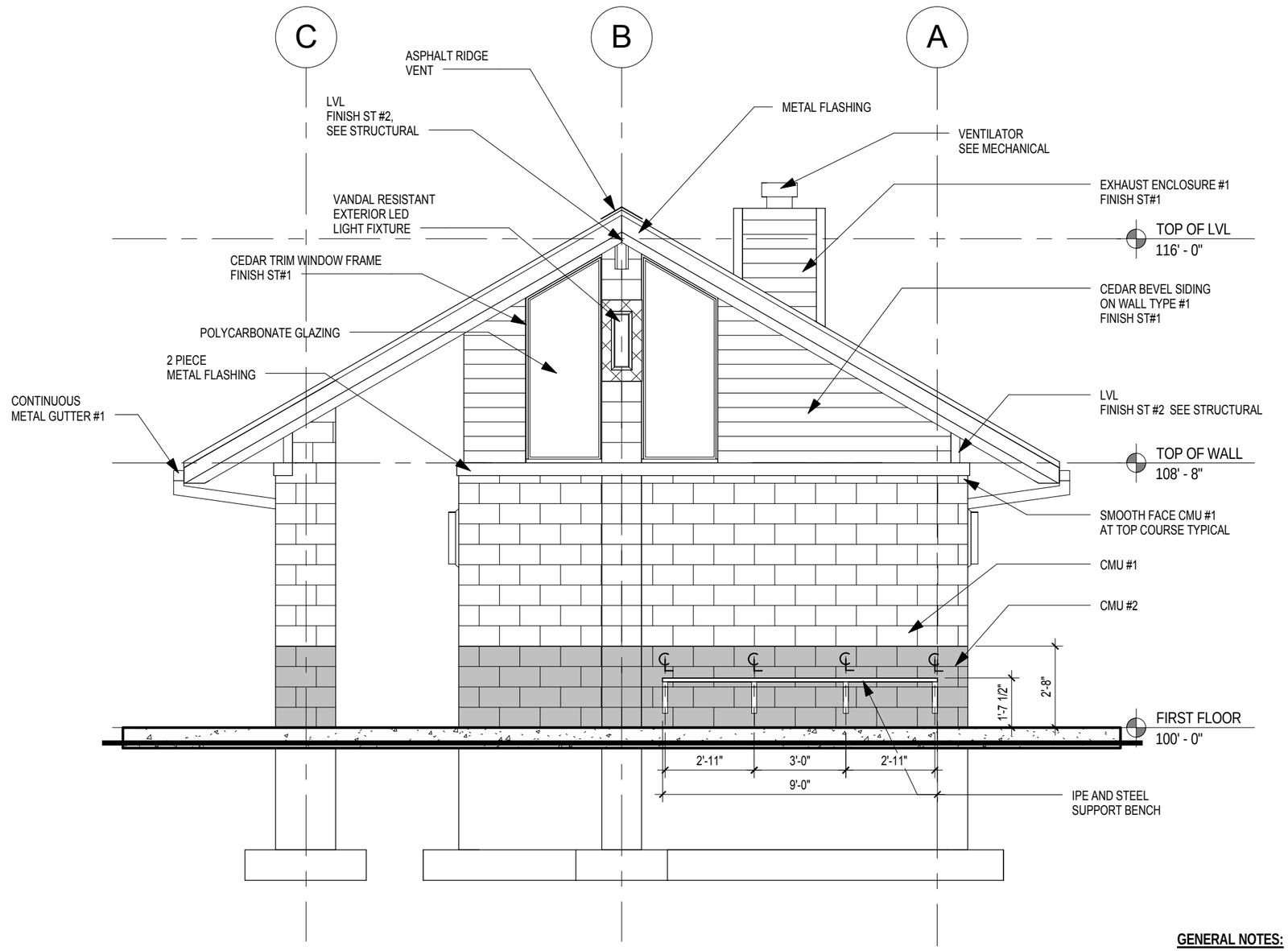

1 NORTH ELEVATION

1/4" = 1'-0"

GENERAL NOTES:

REFER TO G101-G202 FOR SCHEDULES AND NOTES

DORSCHNER ASSOCIATES

Architecture
Planning

Dorschner|Associates, Inc.
849 E. Washington Ave., Ste. 112
Madison, Wisconsin 53703

ISSUED

02.16.15 CONSTRUCTION DOCUMENTS

PROJECT
MONONA SCHLUTER PARK RESTROOMS
4500 WINNEQUAH ROAD
MONONA, WI 53716

PROJECT NO.
14013-00

DRAWING
EXTERIOR ELEVATIONS

DATE
02.16.15

A104

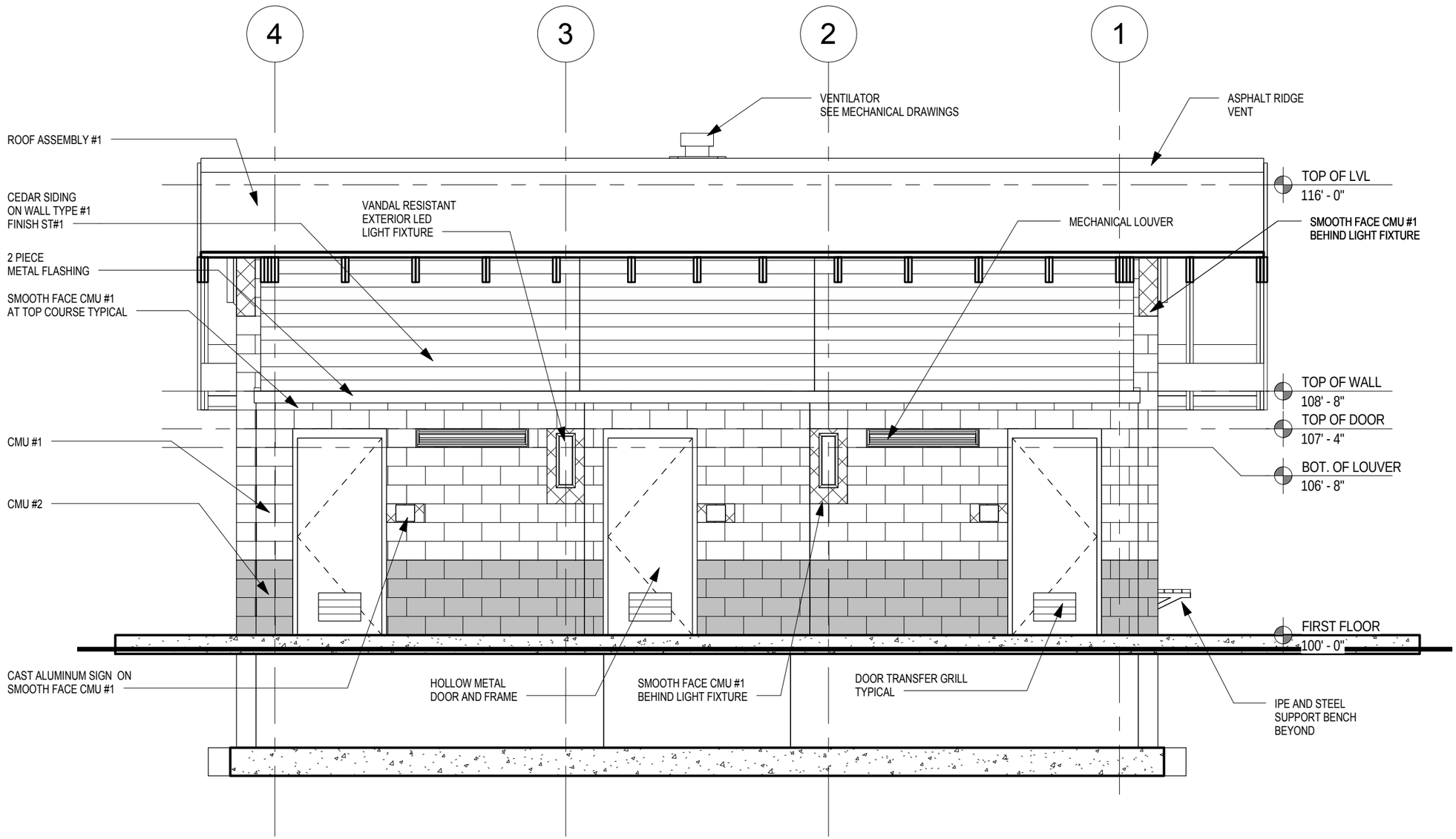

1 EAST ELEVATION-2

1/4" = 1'-0"

GENERAL NOTES:

REFER TO G101-G202
FOR SCHEDULES AND NOTES

DORSCHNER ASSOCIATES

Architecture
Planning

Dorschner|Associates, Inc.
849 E. Washington Ave., Ste. 112
Madison, Wisconsin 53703

ISSUED

02.16.15 CONSTRUCTION DOCUMENTS

PROJECT
MONONA SCHLUTER PARK
RESTROOMS
4500 WINNEQUAH ROAD
MONONA, WI 53716

PROJECT NO.
14013-00

DRAWING
EXTERIOR ELEVATIONS

DATE
02.16.15

A105

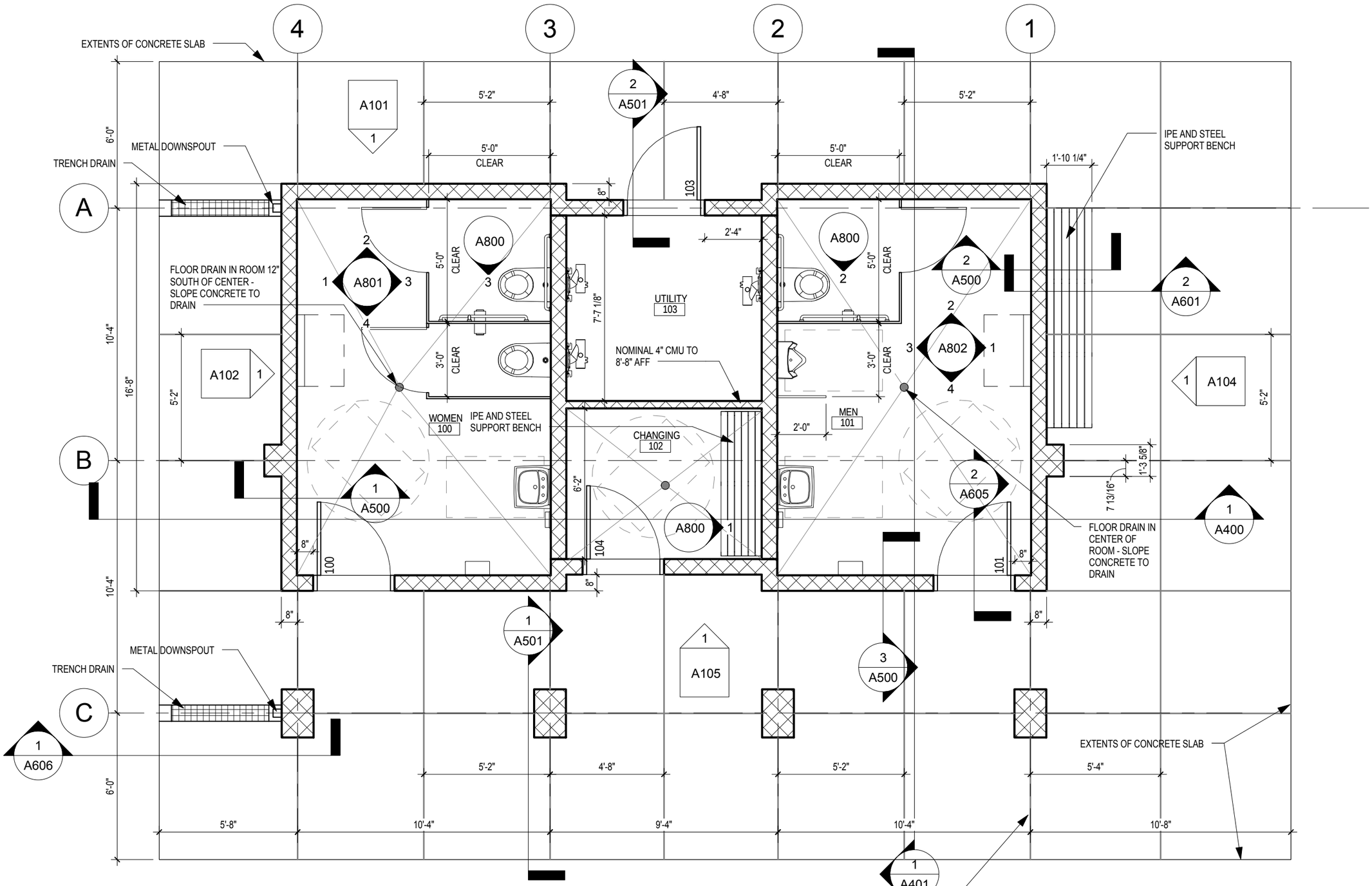

1 FLOOR PLAN

1/4" = 1'-0"

SCREENED LINES INDICATE
CONTROL JOINT AT COLUMN CENTERLINES
MASONRY EDGES OR AS NOTED
SEE STRUCTURAL

GENERAL NOTES:

REFER TO G101-G202
FOR SCHEDULES AND NOTES

DORSCHNER ASSOCIATES

Architecture
Planning

Dorschner|Associates, Inc.
849 E. Washington Ave., Ste. 112
Madison, Wisconsin 53703

ISSUED

02.16.15 CONSTRUCTION DOCUMENTS

PROJECT
MONONA SCHLUTER PARK RESTROOMS
4500 WINNEQUAH ROAD
MONONA, WI 53716

PROJECT NO.
14013-00

DRAWING
FLOOR PLAN

DATE
02.16.15

A200

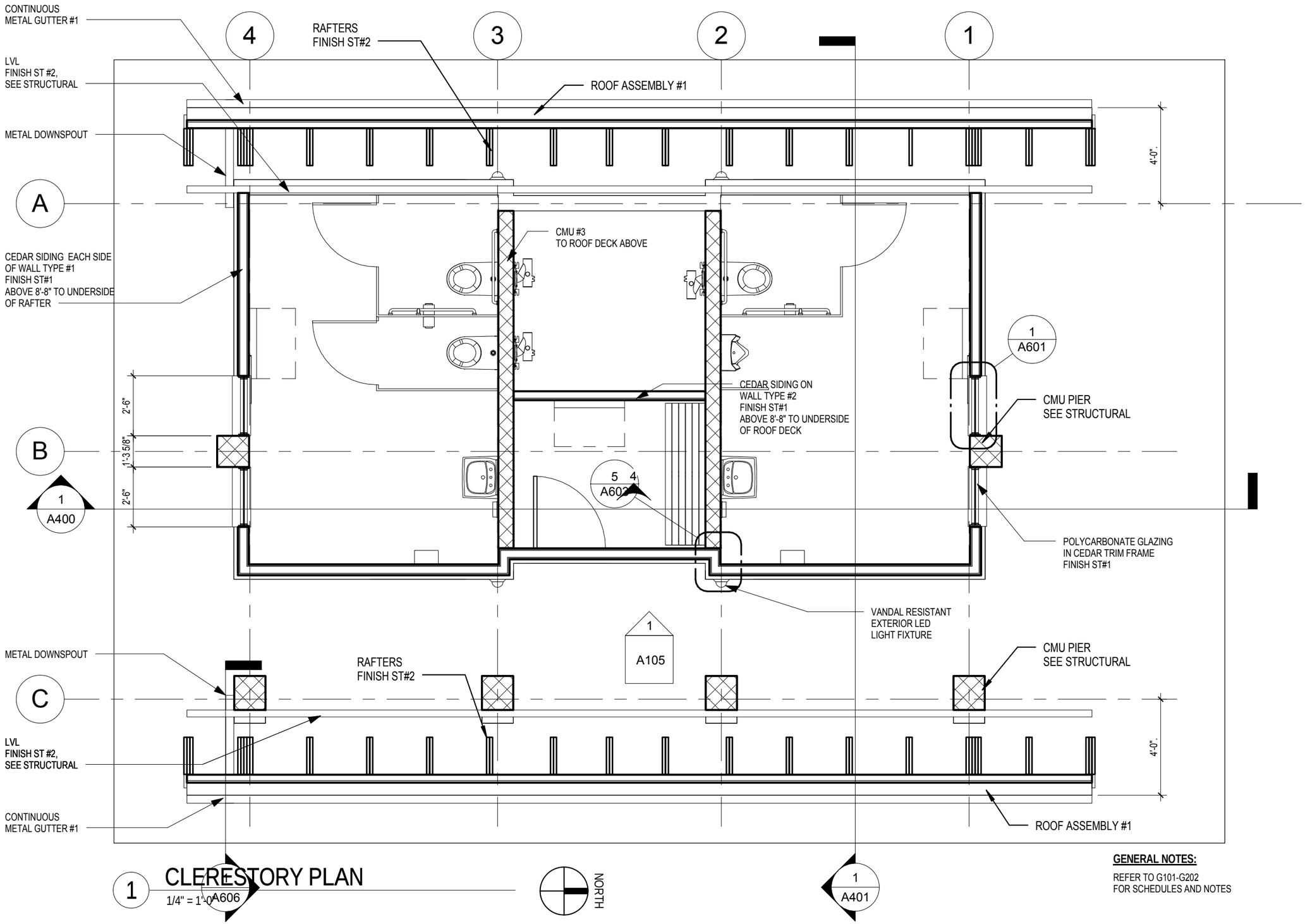

1 CLERESTORY PLAN
1/4" = 1'-0"

GENERAL NOTES:

REFER TO G101-G202
FOR SCHEDULES AND NOTES

DORSCHNER ASSOCIATES

Architecture
Planning

Dorschner|Associates, Inc.
849 E. Washington Ave., Ste. 112
Madison, Wisconsin 53703

ISSUED

02.16.15 CONSTRUCTION DOCUMENTS

PROJECT
MONONA SCHLUTER PARK
RESTROOMS
4500 WINNEQUAH ROAD
MONONA, WI 53716

PROJECT NO.
14013-00

DRAWING
CLERESTORY PLAN

DATE
02.16.15

A201

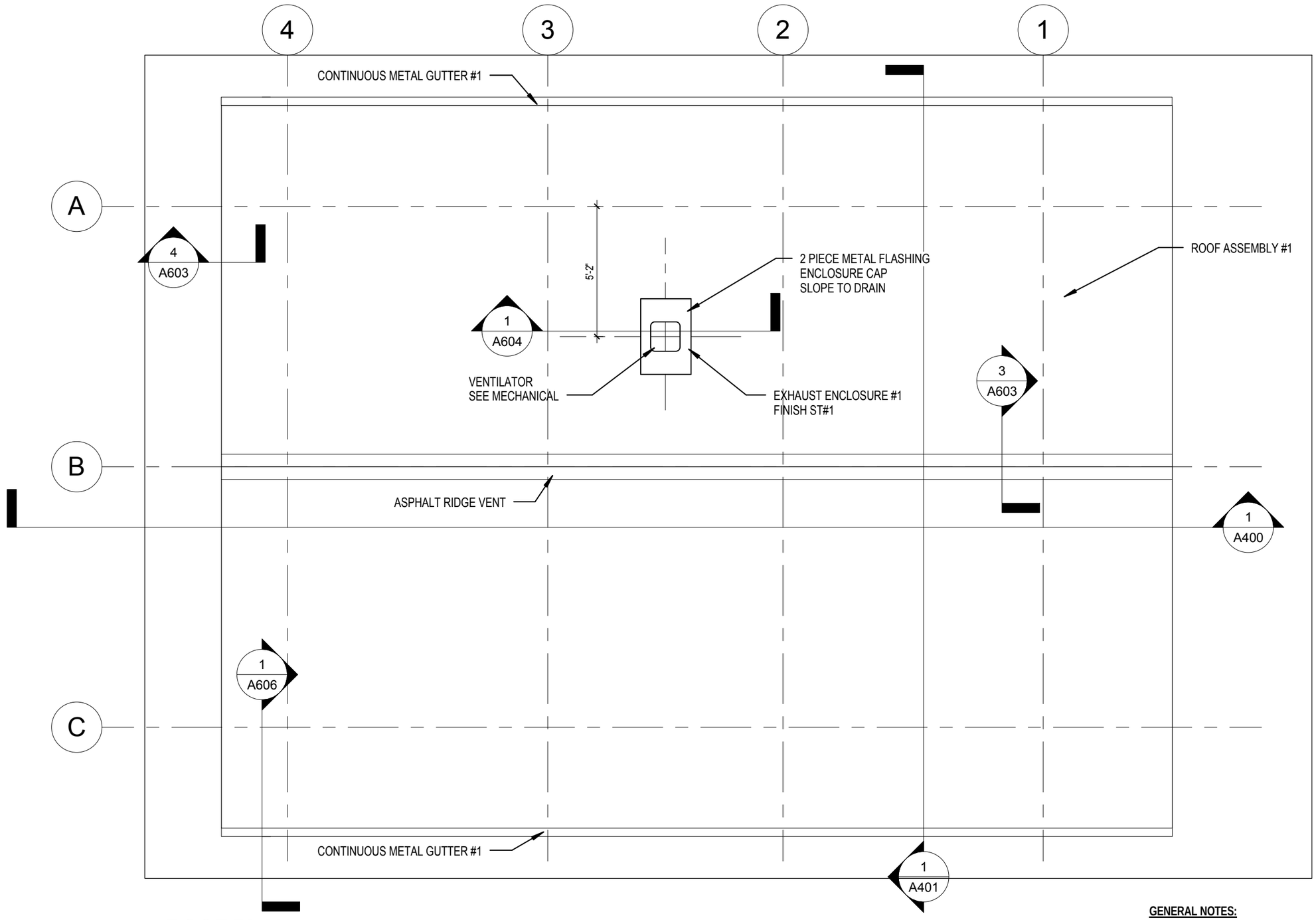

1 ROOF PLAN

1/4" = 1'-0"

GENERAL NOTES:

REFER TO G101-G202
FOR SCHEDULES AND NOTES

DORSCHNER ASSOCIATES

Architecture
Planning

Dorschner|Associates, Inc.
849 E. Washington Ave., Ste. 112
Madison, Wisconsin 53703

ISSUED

02.16.15 CONSTRUCTION DOCUMENTS

PROJECT
MONONA SCHLUTER PARK
RESTROOMS
4500 WINNEQUAH ROAD
MONONA, WI 53716

PROJECT NO.
14013-00

DRAWING
ROOF PLAN

DATE
02.16.15

A202

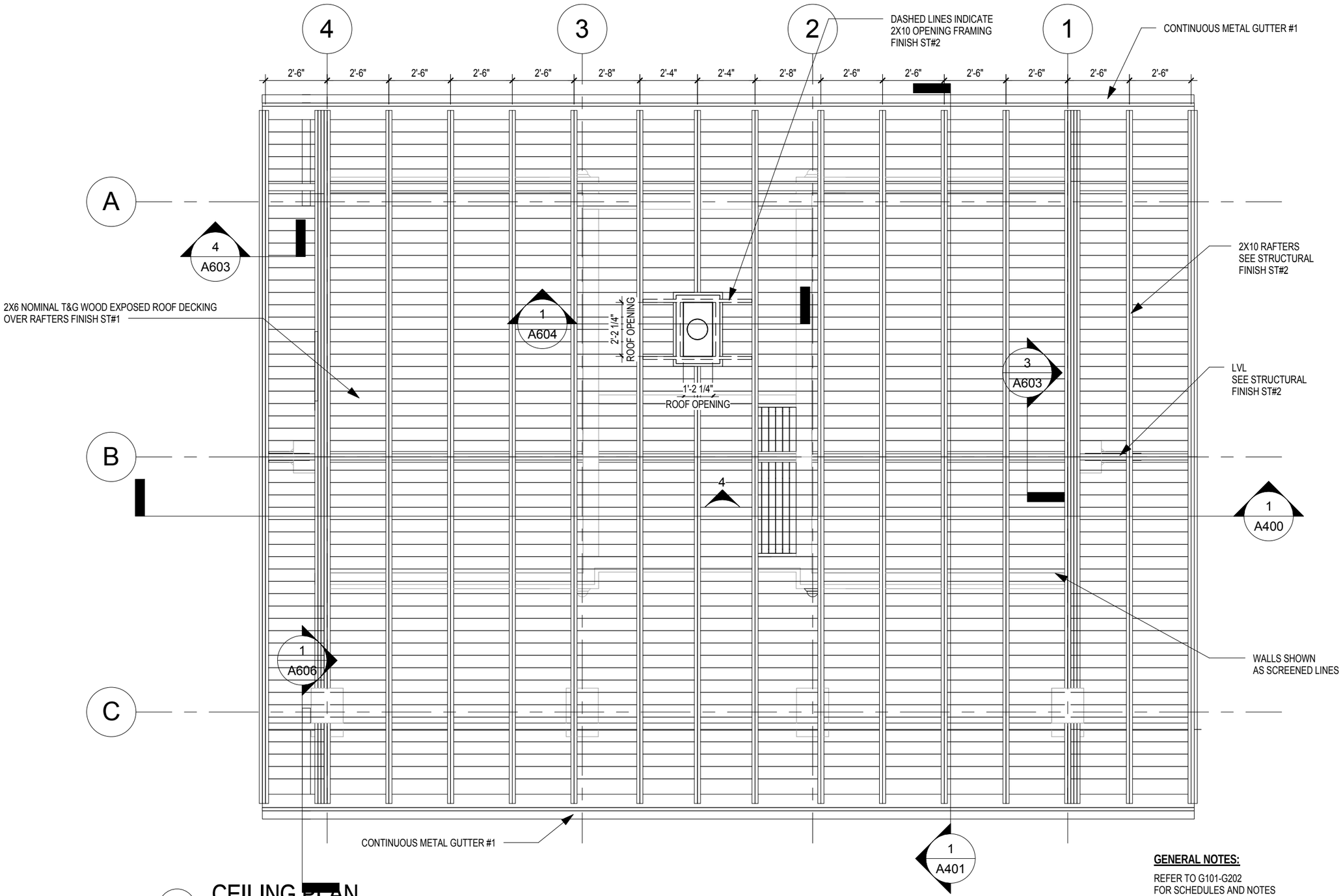

1 CEILING PLAN

1/4" = 1'-0"

GENERAL NOTES:

REFER TO G101-G202
FOR SCHEDULES AND NOTES

DORSCHNER ASSOCIATES

Architecture
Planning

Dorschner|Associates, Inc.
849 E. Washington Ave., Ste. 112
Madison, Wisconsin 53703

ISSUED

02.16.15 CONSTRUCTION DOCUMENTS

PROJECT
MONONA SCHLUTER PARK
RESTROOMS
4500 WINNEQUAH ROAD
MONONA, WI 53716

PROJECT NO.
14013-00

DRAWING
CEILING PLAN

DATE
02.16.15

A300

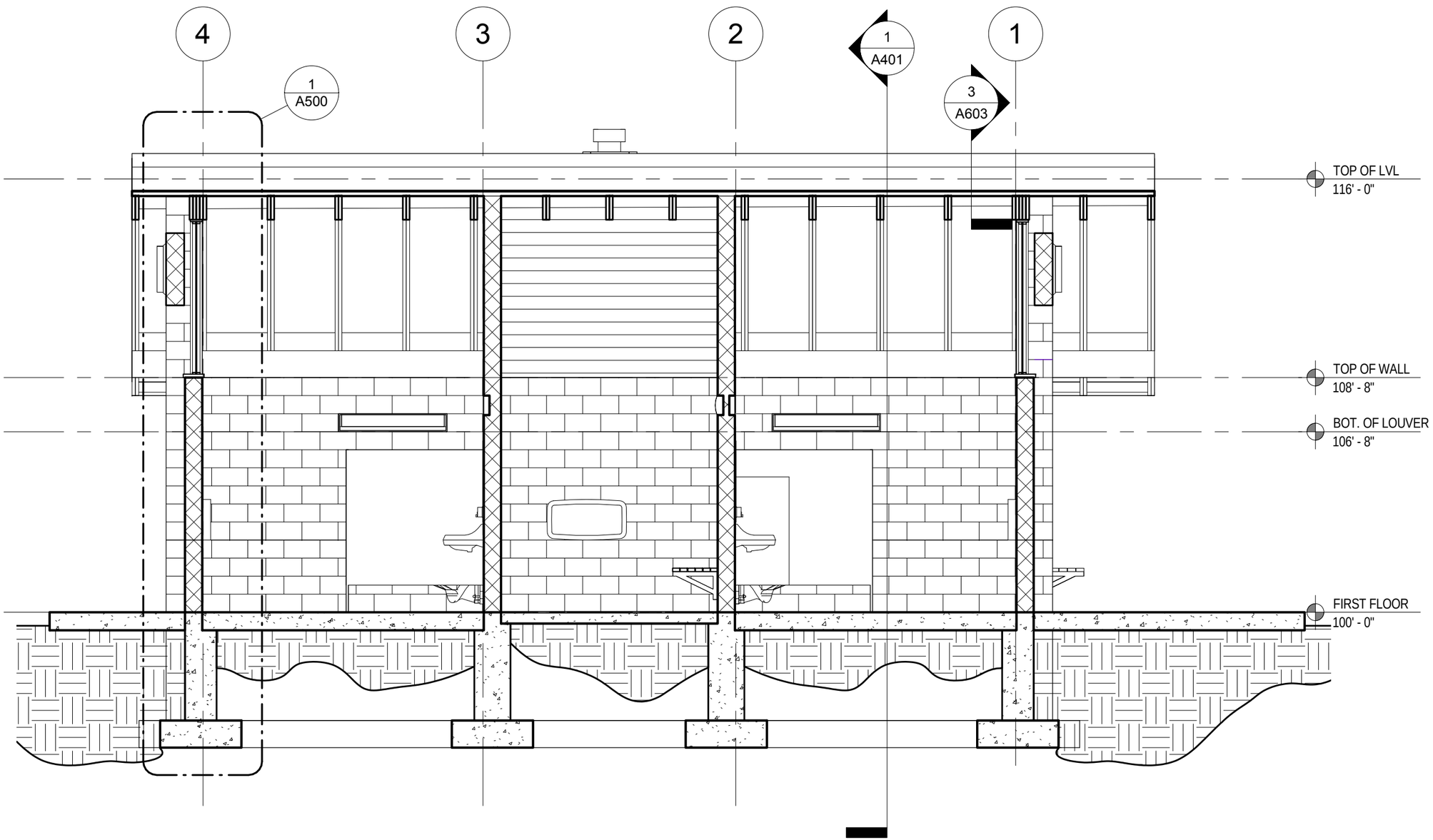

1 BUILDING SECTION

1/4" = 1'-0"

GENERAL NOTES:

REFER TO G101-G202
FOR SCHEDULES AND NOTES

DORSCHNER ASSOCIATES

Architecture
Planning

Dorschner|Associates, Inc.
849 E. Washington Ave., Ste. 112
Madison, Wisconsin 53703

ISSUED

02.16.15 CONSTRUCTION DOCUMENTS

PROJECT
MONONA SCHLUTER PARK RESTROOMS
4500 WINNEQUAH ROAD
MONONA, WI 53716

PROJECT NO.
14013-00

DRAWING
BUILDING SECTIONS

DATE
02.16.15

A400

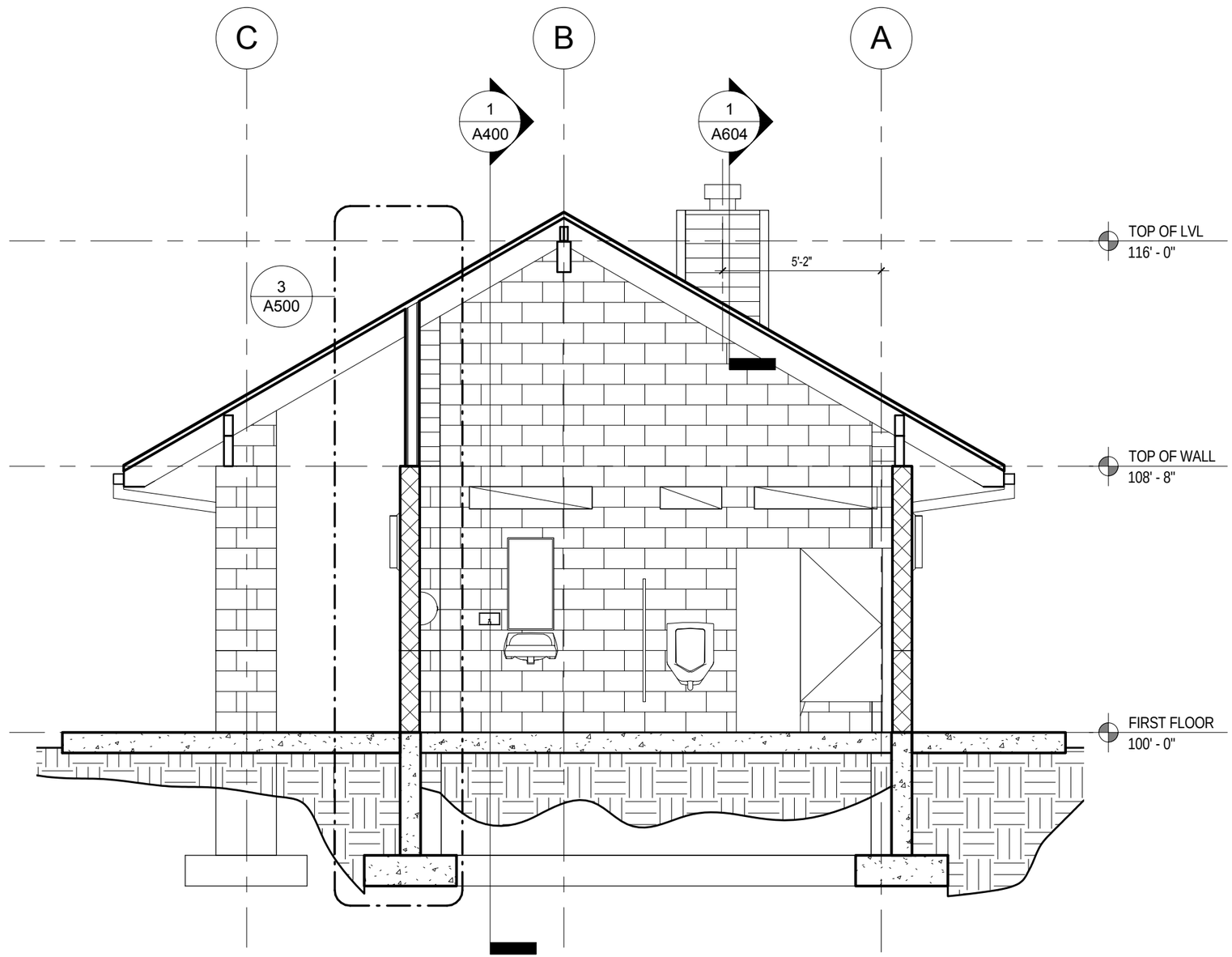

GENERAL NOTES:

REFER TO G101-G202
FOR SCHEDULES AND NOTES

1 BUILDING SECTION

1/4" = 1'-0"

DORSCHNER ASSOCIATES

Architecture
Planning

Dorschner|Associates, Inc.
849 E. Washington Ave., Ste. 112
Madison, Wisconsin 53703

ISSUED

02.16.15 CONSTRUCTION DOCUMENTS

PROJECT
MONONA SCHLUTER PARK
RESTROOMS
4500 WINNEQUAH ROAD
MONONA, WI 53716

PROJECT NO.
14013-00

DRAWING
BUILDING SECTIONS

DATE
02.16.15

A401

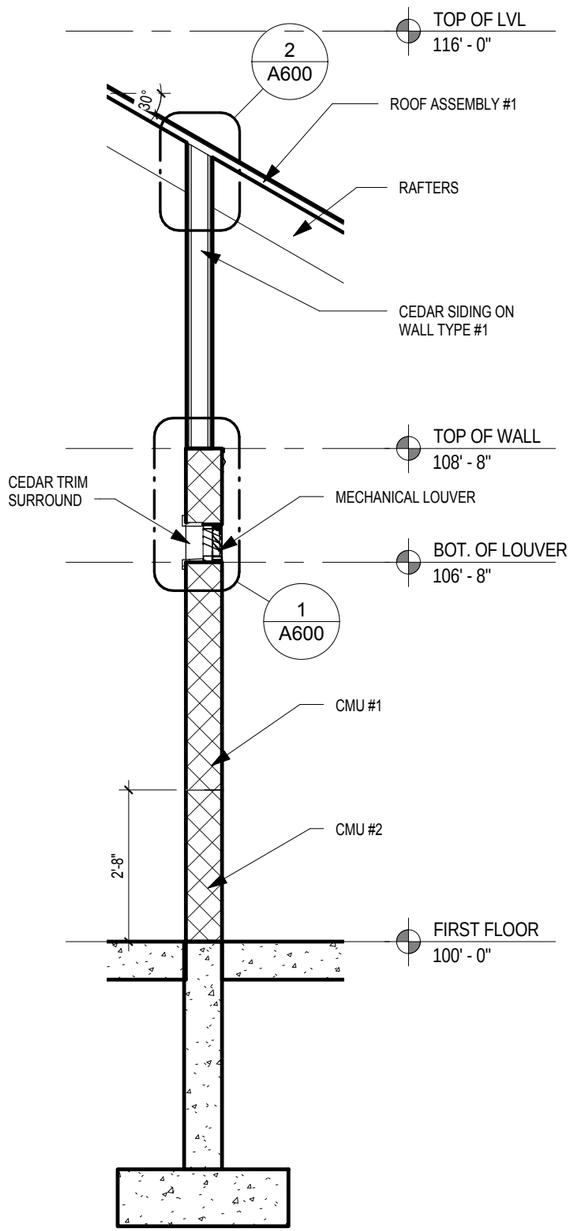

3 WALL SECTION
3/8" = 1'-0"

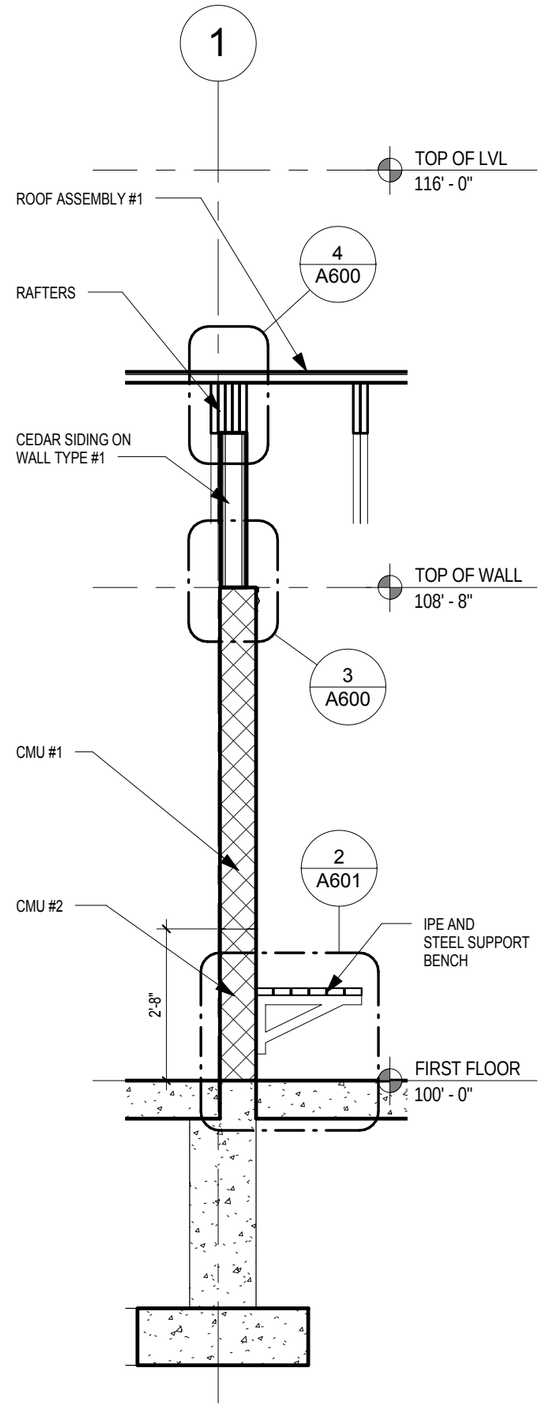

2 WALL SECTION
3/8" = 1'-0"

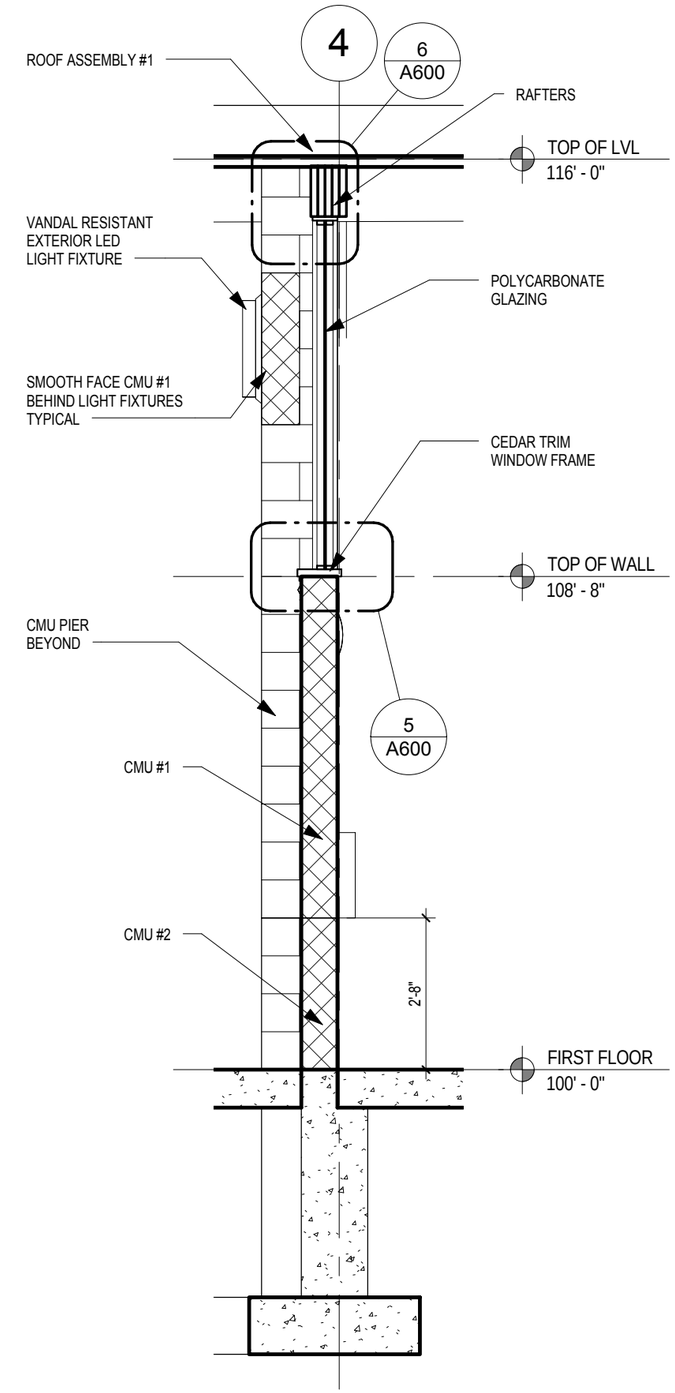

1 WALL SECTION
3/8" = 1'-0"

DORSCHNER ASSOCIATES
Architecture
Planning

Dorschner|Associates, Inc.
849 E. Washington Ave., Ste. 112
Madison, Wisconsin 53703

ISSUED

02.16.15 CONSTRUCTION DOCUMENTS

PROJECT
MONONA SCHLUTER PARK
RESTROOMS
4500 WINNEQUAH ROAD
MONONA, WI 53716

PROJECT NO.
14013-00

DRAWING
WALL SECTIONS

DATE
02.16.15

A500

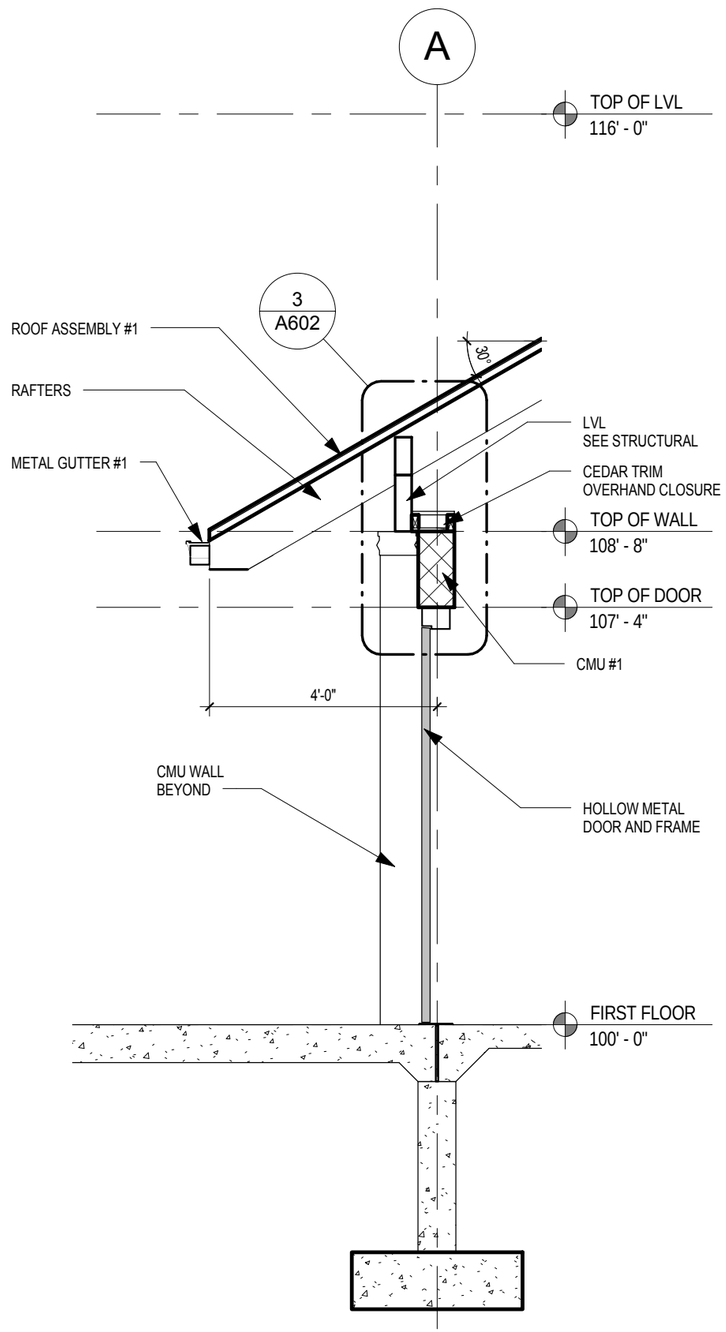

2 WALL SECTION
3/8" = 1'-0"

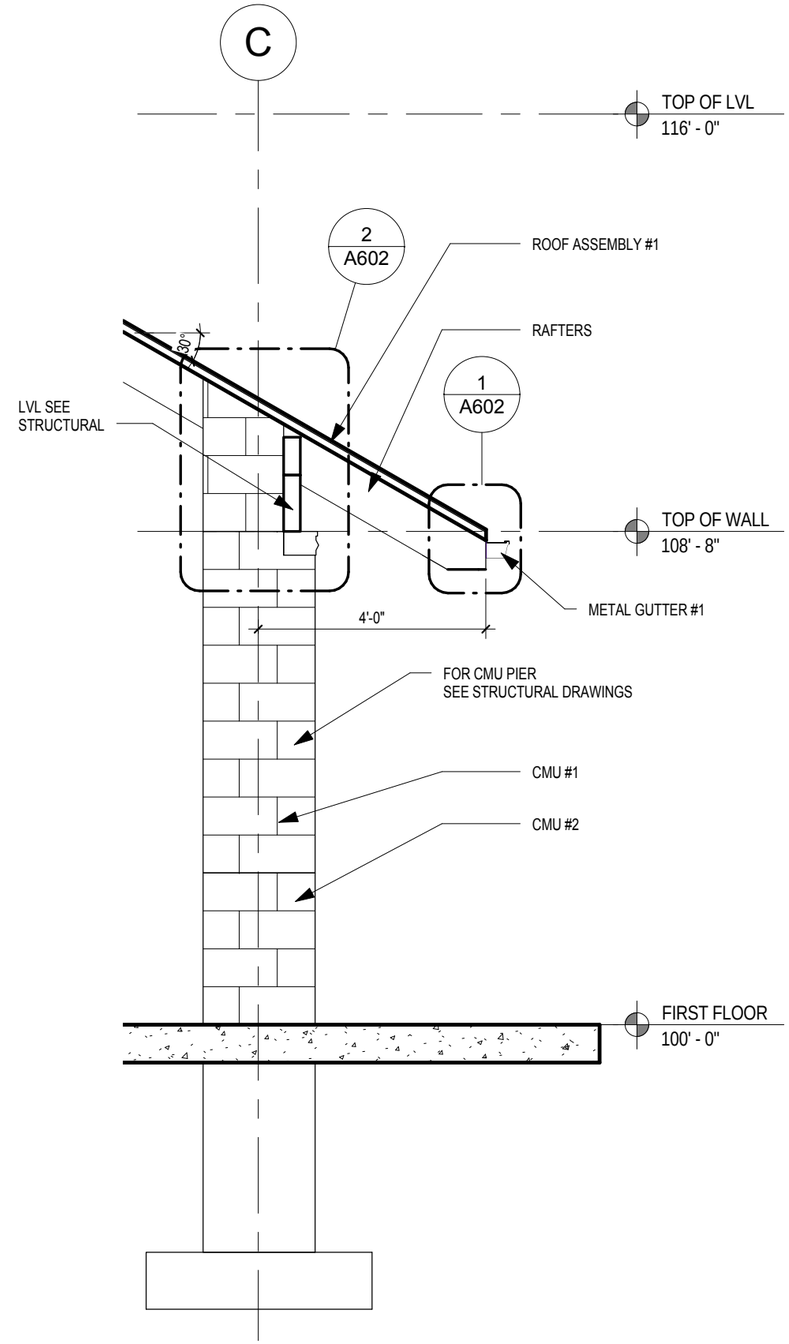

1 WALL SECTION
3/8" = 1'-0"

DORSCHNER ASSOCIATES
Architecture
Planning

Dorschner|Associates, Inc.
849 E. Washington Ave., Ste. 112
Madison, Wisconsin 53703

ISSUED

02.16.15 CONSTRUCTION DOCUMENTS

PROJECT
MONONA SCHLUTER PARK
RESTROOMS
4500 WINNEQUAH ROAD
MONONA, WI 53716

PROJECT NO.
14013-00

DRAWING
WALL SECTIONS

DATE
02.16.15

A501

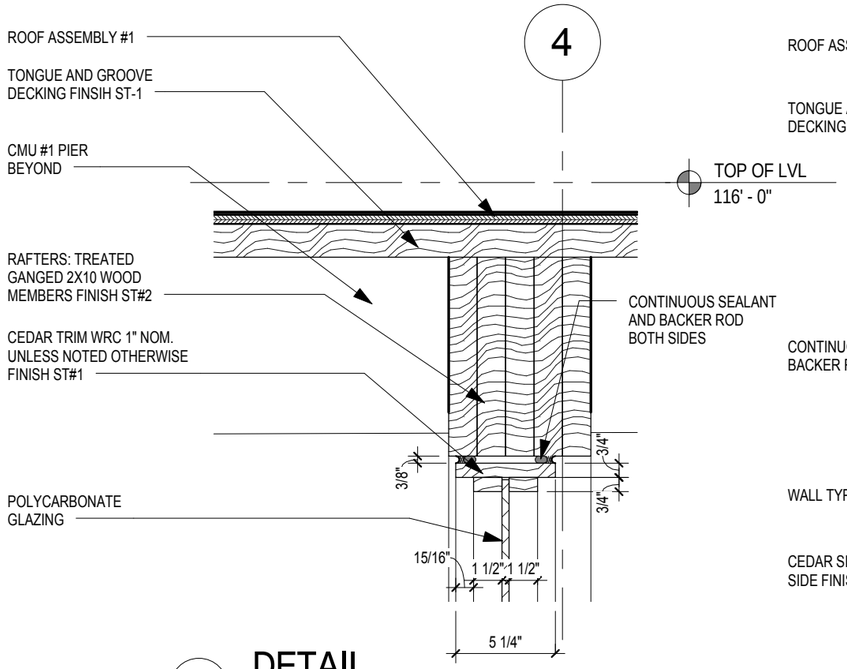

6 DETAIL
1 1/2" = 1'-0"

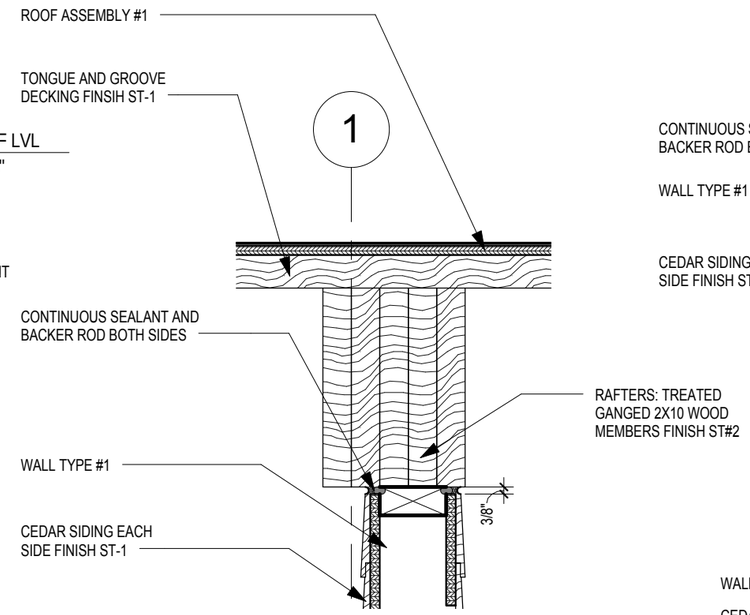

4 DETAIL
1 1/2" = 1'-0"

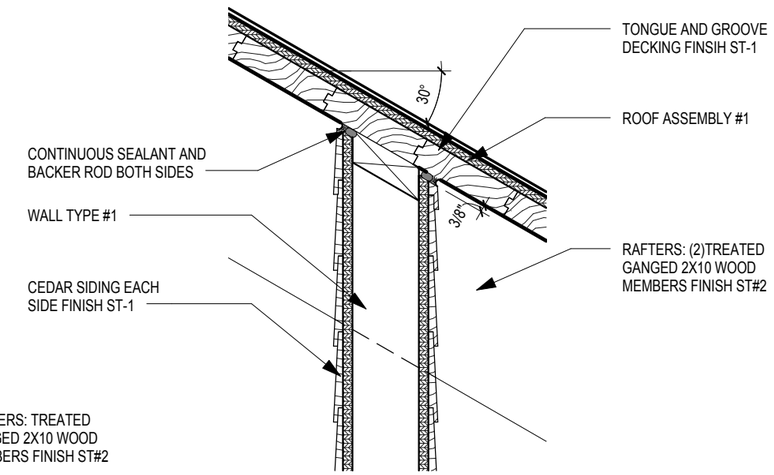

2 DETAIL
1 1/2" = 1'-0"

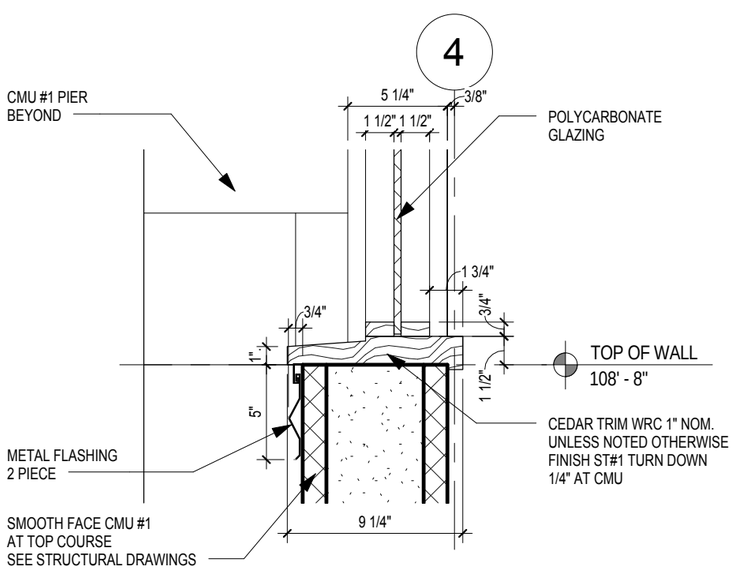

5 DETAIL
1 1/2" = 1'-0"

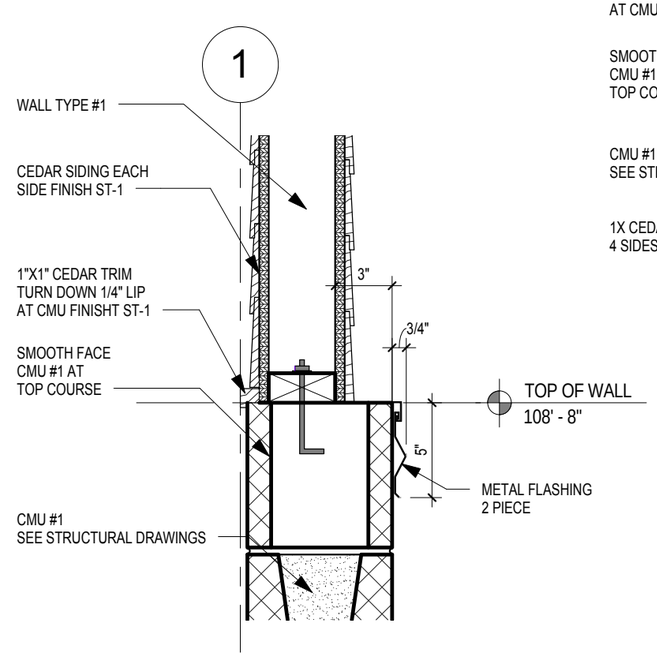

3 DETAIL
1 1/2" = 1'-0"

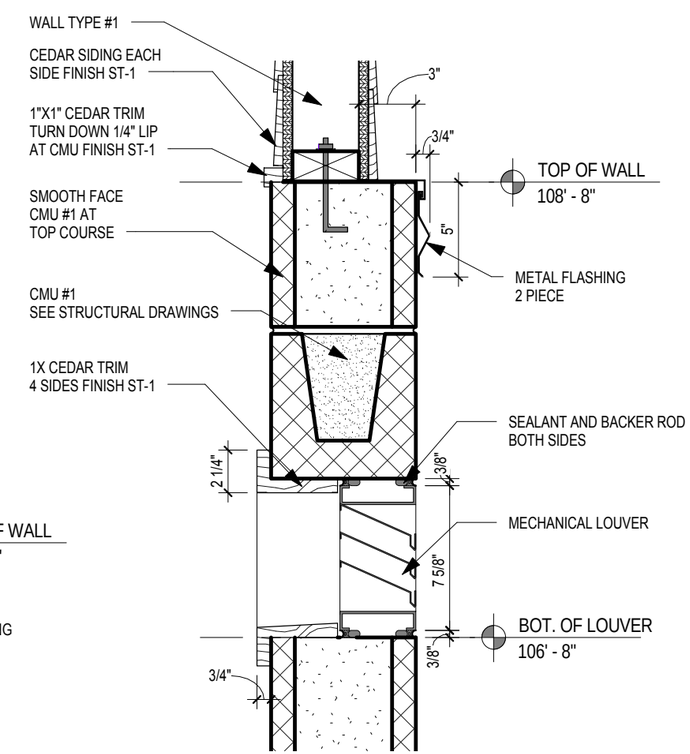

1 DETAIL
1 1/2" = 1'-0"

GENERAL NOTES:

REFER TO G101-G202
FOR SCHEDULES AND NOTES

DORSCHNER ASSOCIATES

Architecture
Planning

Dorschner|Associates, Inc.
849 E. Washington Ave., Ste. 112
Madison, Wisconsin 53703

ISSUED

02.16.15 CONSTRUCTION DOCUMENTS

PROJECT
MONONA SCHLUTER PARK RESTROOMS
4500 WINNEQUAH ROAD
MONONA, WI 53716

PROJECT NO.
14013-00

DRAWING
EXTERIOR DETAILS

DATE
02.16.15

A600

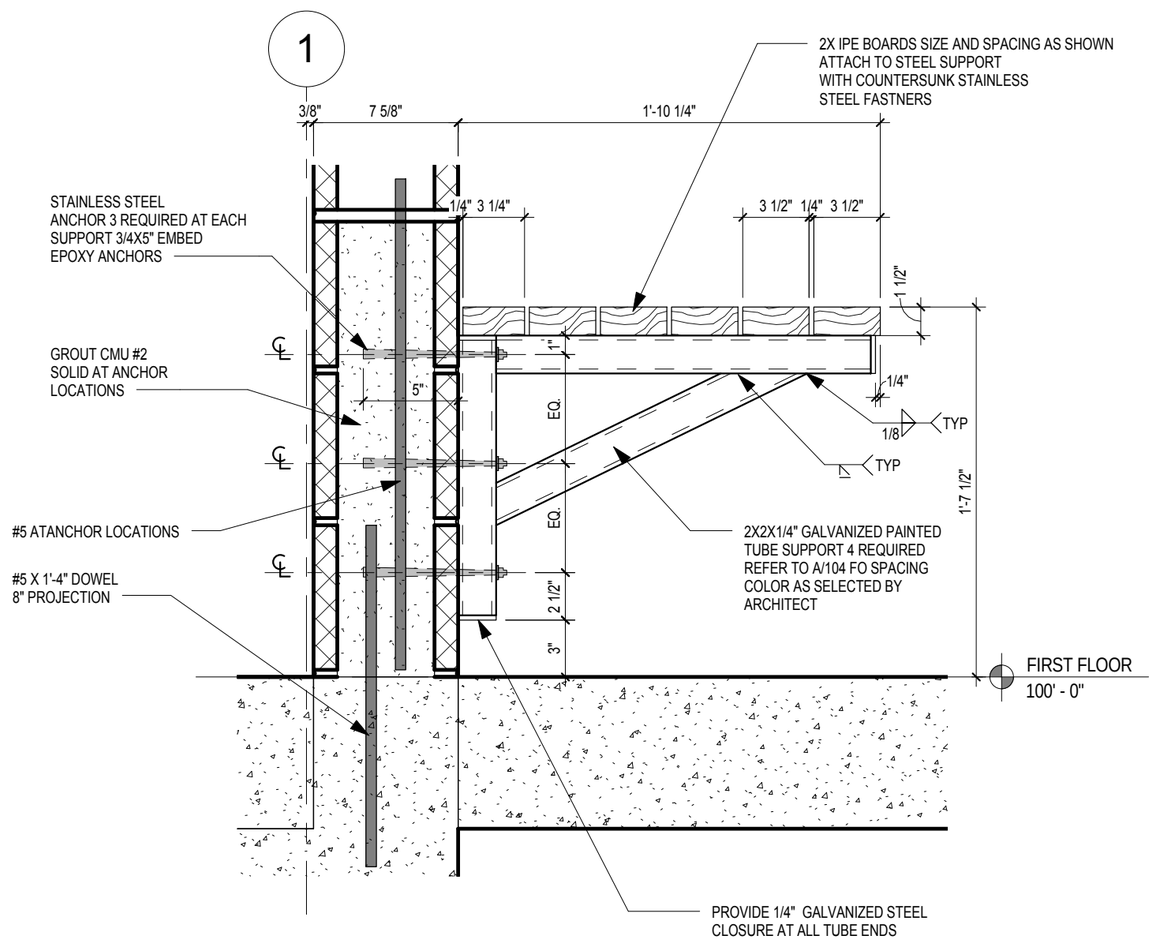

2 DETAIL
1 1/2" = 1'-0"

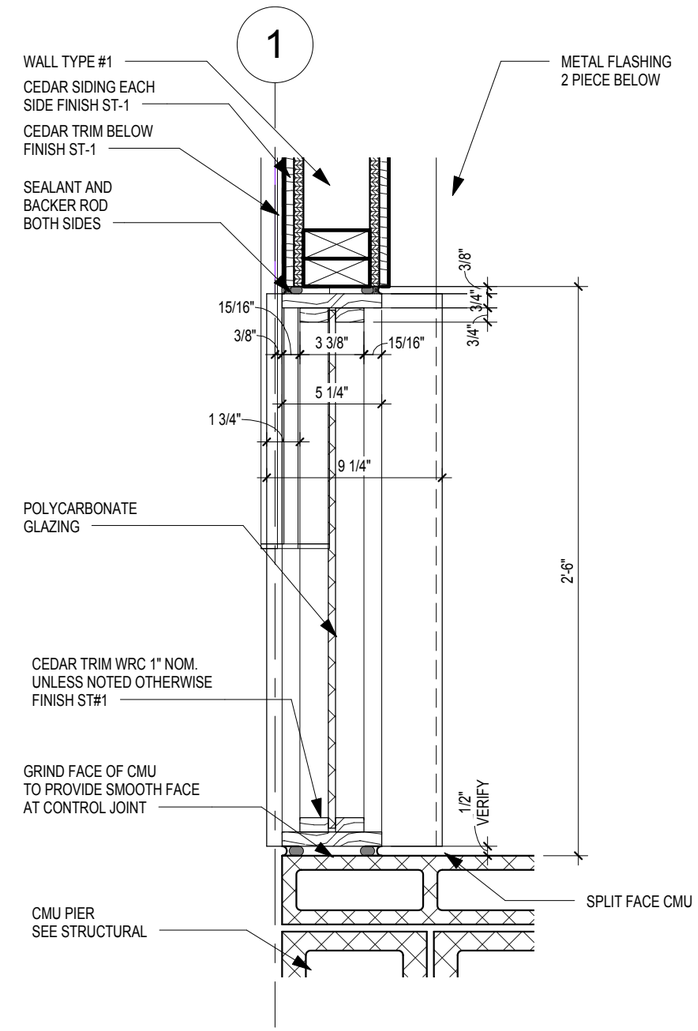

1 DETAIL
1 1/2" = 1'-0"

GENERAL NOTES:

REFER TO G101-G202
FOR SCHEDULES AND NOTES

DORSCHNER ASSOCIATES

Architecture
Planning

Dorschner|Associates, Inc.
849 E. Washington Ave., Ste. 112
Madison, Wisconsin 53703

ISSUED

02.16.15 CONSTRUCTION DOCUMENTS

PROJECT
MONONA SCHLUTER PARK
RESTROOMS
4500 WINNEQUAH ROAD
MONONA, WI 53716

PROJECT NO.
14013-00

DRAWING
EXTERIOR DETAILS

DATE
02.16.15

A601

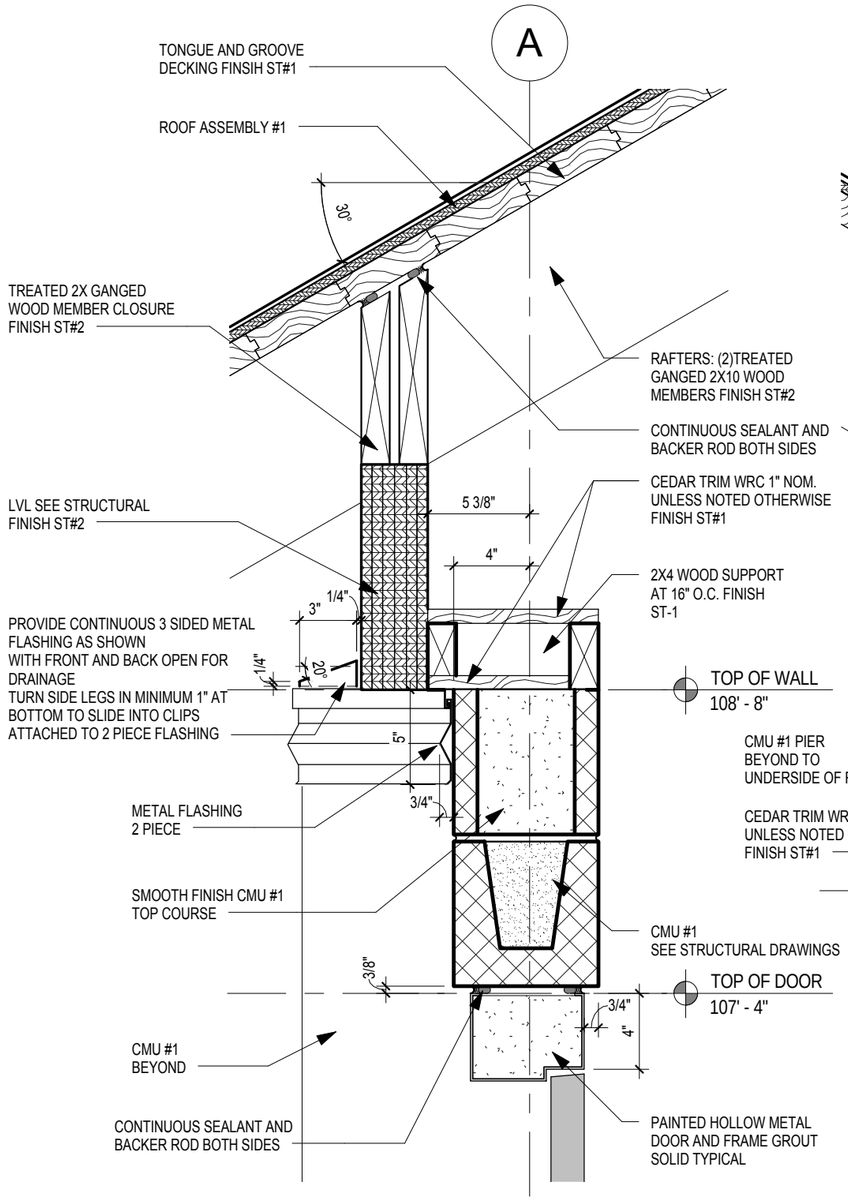

3 DETAIL
1 1/2" = 1'-0"

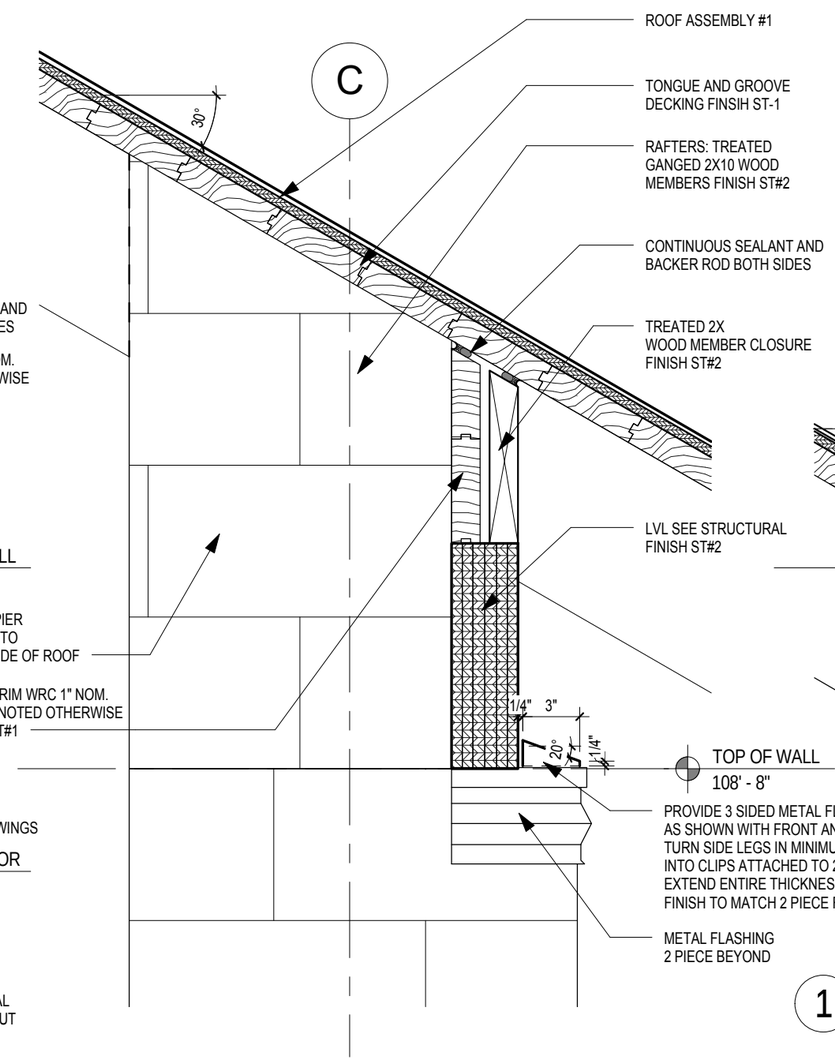

2 DETAIL
1 1/2" = 1'-0"

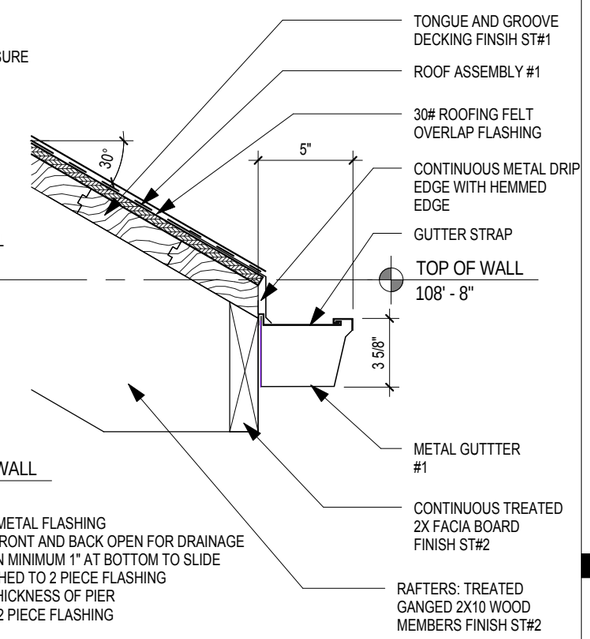

1 DETAIL
1 1/2" = 1'-0"

GENERAL NOTES:

REFER TO G101-G202
FOR SCHEDULES AND NOTES

DORSCHNER ASSOCIATES

Architecture
Planning

Dorschner|Associates, Inc.
849 E. Washington Ave., Ste. 112
Madison, Wisconsin 53703

ISSUED

02.16.15 CONSTRUCTION DOCUMENTS

PROJECT
MONONA SCHLUTER PARK
RESTROOMS
4500 WINNEQUAH ROAD
MONONA, WI 53716

PROJECT NO.
14013-00

DRAWING
EXTERIOR DETAILS

DATE
02.16.15

A602

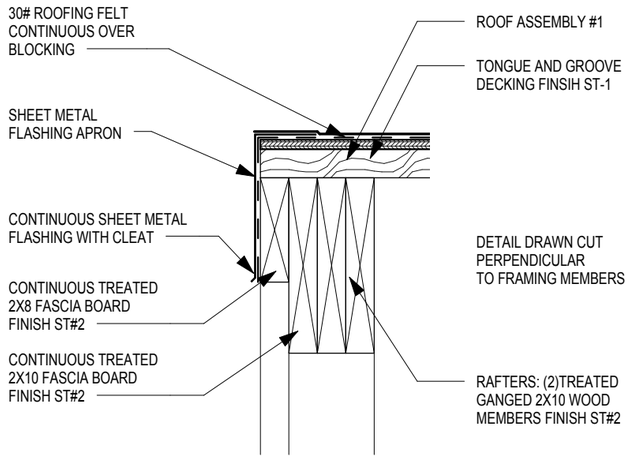

4 DETAIL
1 1/2" = 1'-0"

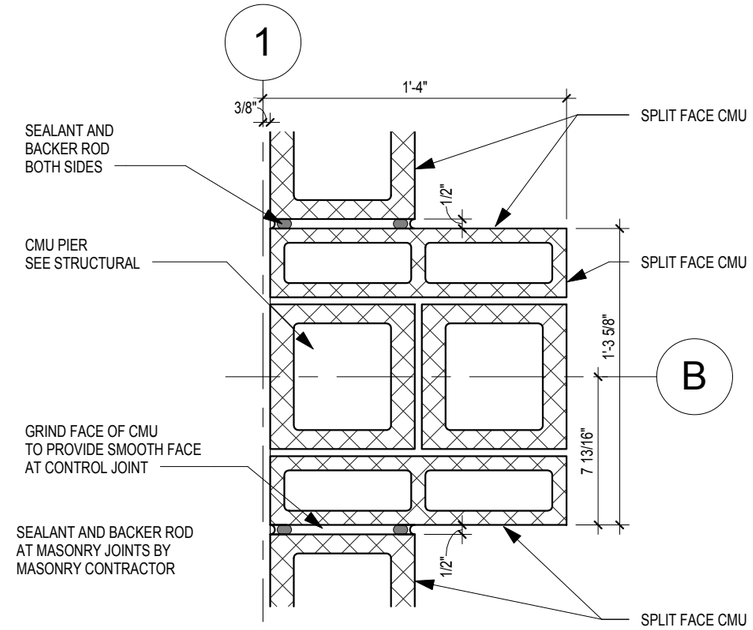

2 DETAIL
1 1/2" = 1'-0"

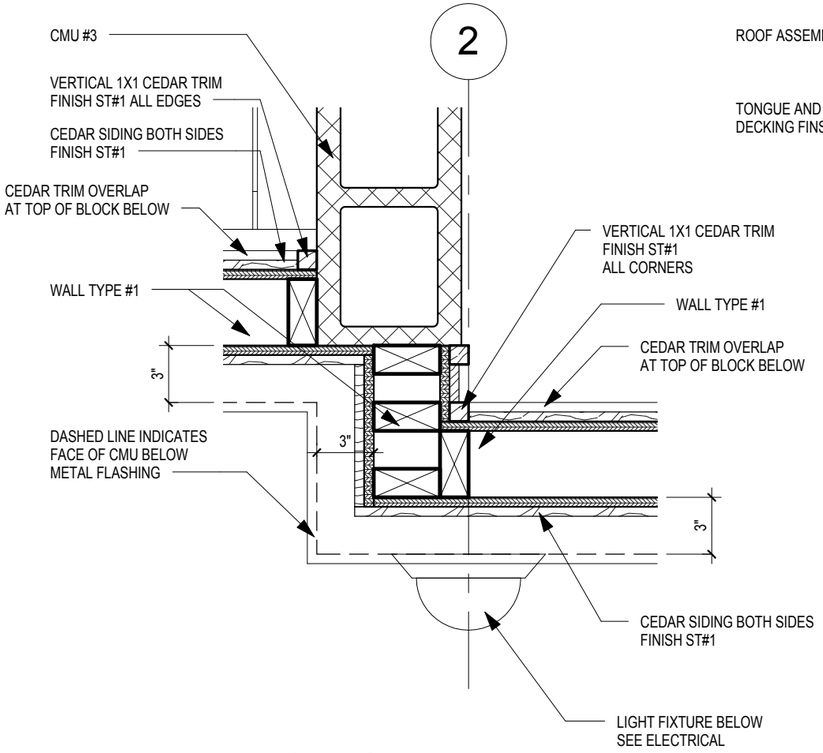

5 DETAIL
1 1/2" = 1'-0"

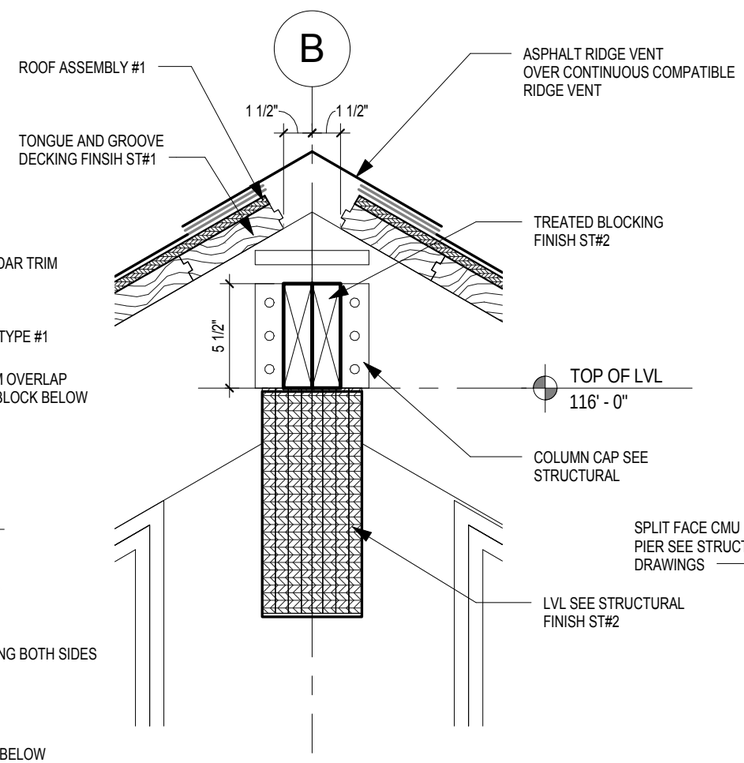

3 DETAIL
1 1/2" = 1'-0"

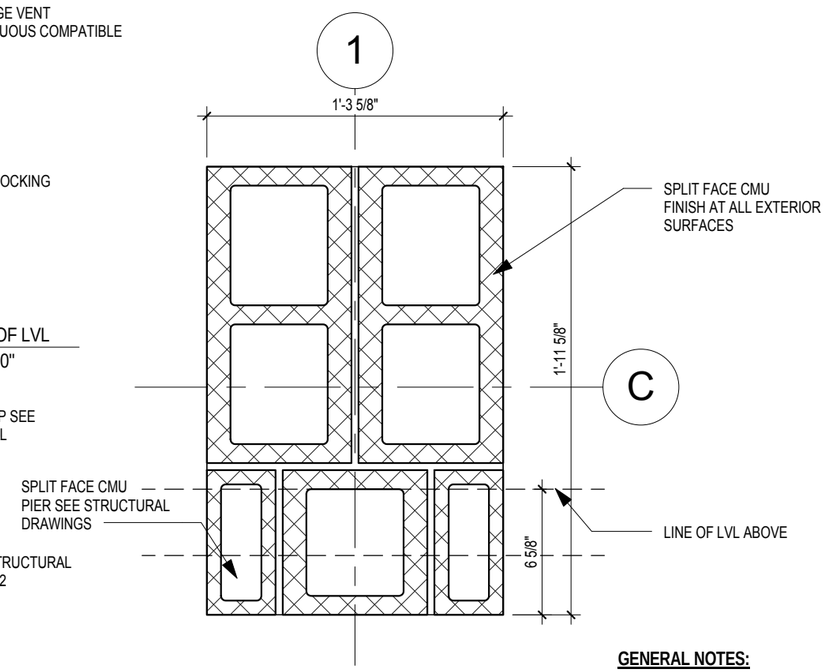

GENERAL NOTES:

REFER TO G101-G202
FOR SCHEDULES AND NOTES

1 DETAIL
1 1/2" = 1'-0"

DORSCHNER ASSOCIATES
Architecture
Planning

Dorschner|Associates, Inc.
849 E. Washington Ave., Ste. 112
Madison, Wisconsin 53703

ISSUED

02.16.15 CONSTRUCTION DOCUMENTS

PROJECT
MONONA SCHLUTER PARK
RESTROOMS
4500 WINNEQUAH ROAD
MONONA, WI 53716

PROJECT NO.
14013-00

DRAWING
EXTERIOR DETAILS

DATE
02.16.15

A603

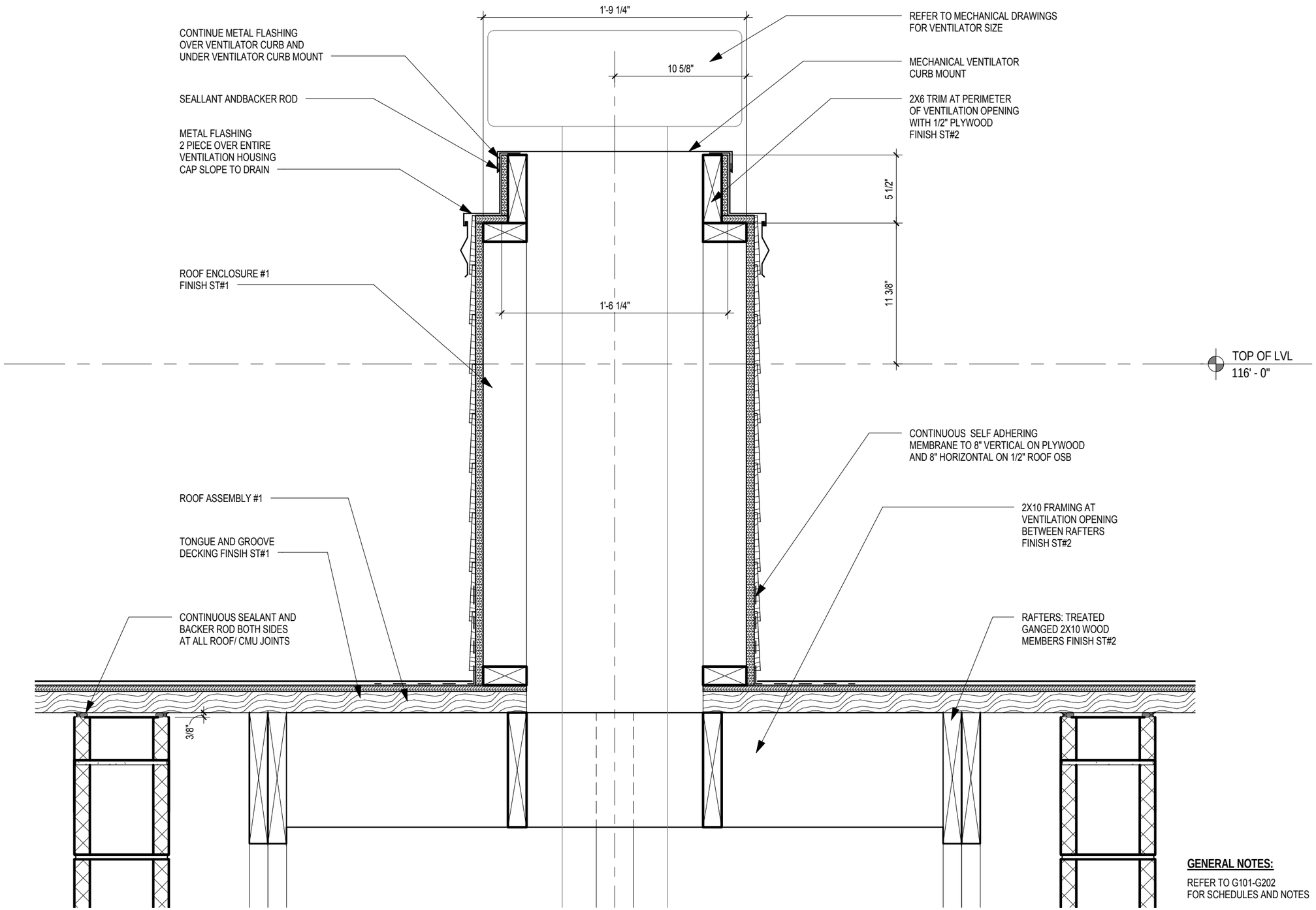

1 DETAIL

1 1/2" = 1'-0"

GENERAL NOTES:

REFER TO G101-G202
FOR SCHEDULES AND NOTES

DORSCHNER ASSOCIATES

Architecture
Planning

Dorschner|Associates, Inc.
849 E. Washington Ave., Ste. 112
Madison, Wisconsin 53703

ISSUED

02.16.15 CONSTRUCTION DOCUMENTS

PROJECT
MONONA SCHLUTER PARK
RESTROOMS
4500 WINNEQUAH ROAD
MONONA, WI 53716

PROJECT NO.
14013-00

DRAWING
EXTERIOR DETAILS

DATE
02.16.15

A604

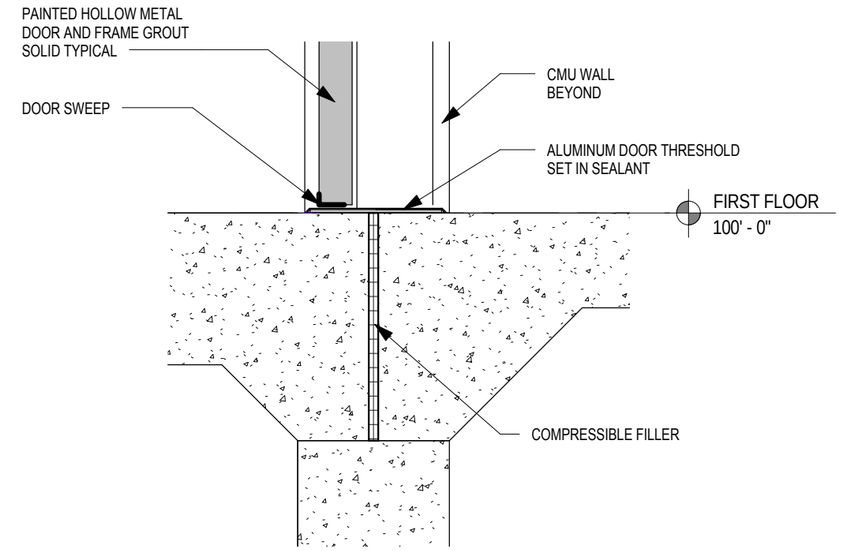

2 DETAIL
1 1/2" = 1'-0"

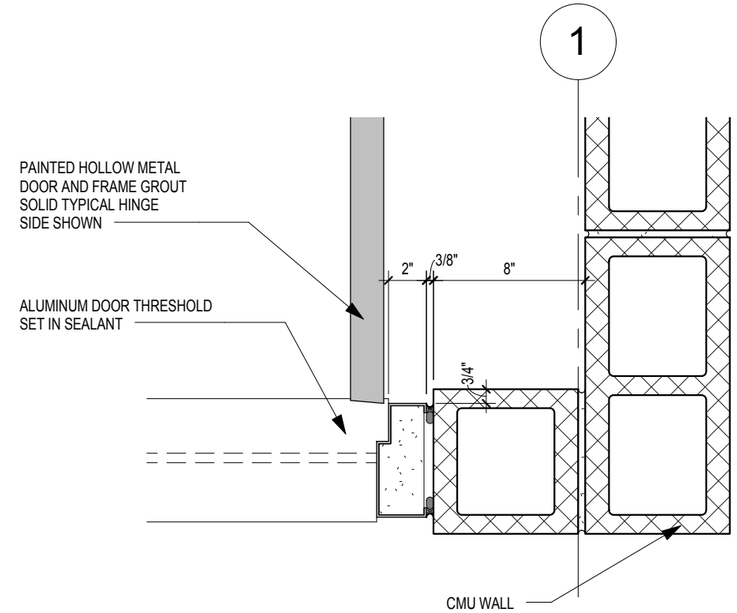

1 DETAIL
1 1/2" = 1'-0"

GENERAL NOTES:

REFER TO G101-G202
FOR SCHEDULES AND NOTES

DORSCHNER ASSOCIATES

Architecture
Planning

Dorschner|Associates, Inc.
849 E. Washington Ave., Ste. 112
Madison, Wisconsin 53703

ISSUED

02.16.15 CONSTRUCTION DOCUMENTS

PROJECT
MONONA SCHLUTER PARK RESTROOMS
4500 WINNEQUAH ROAD
MONONA, WI 53716

PROJECT NO.
14013-00

DRAWING
EXTERIOR DETAILS

DATE
02.16.15

A605

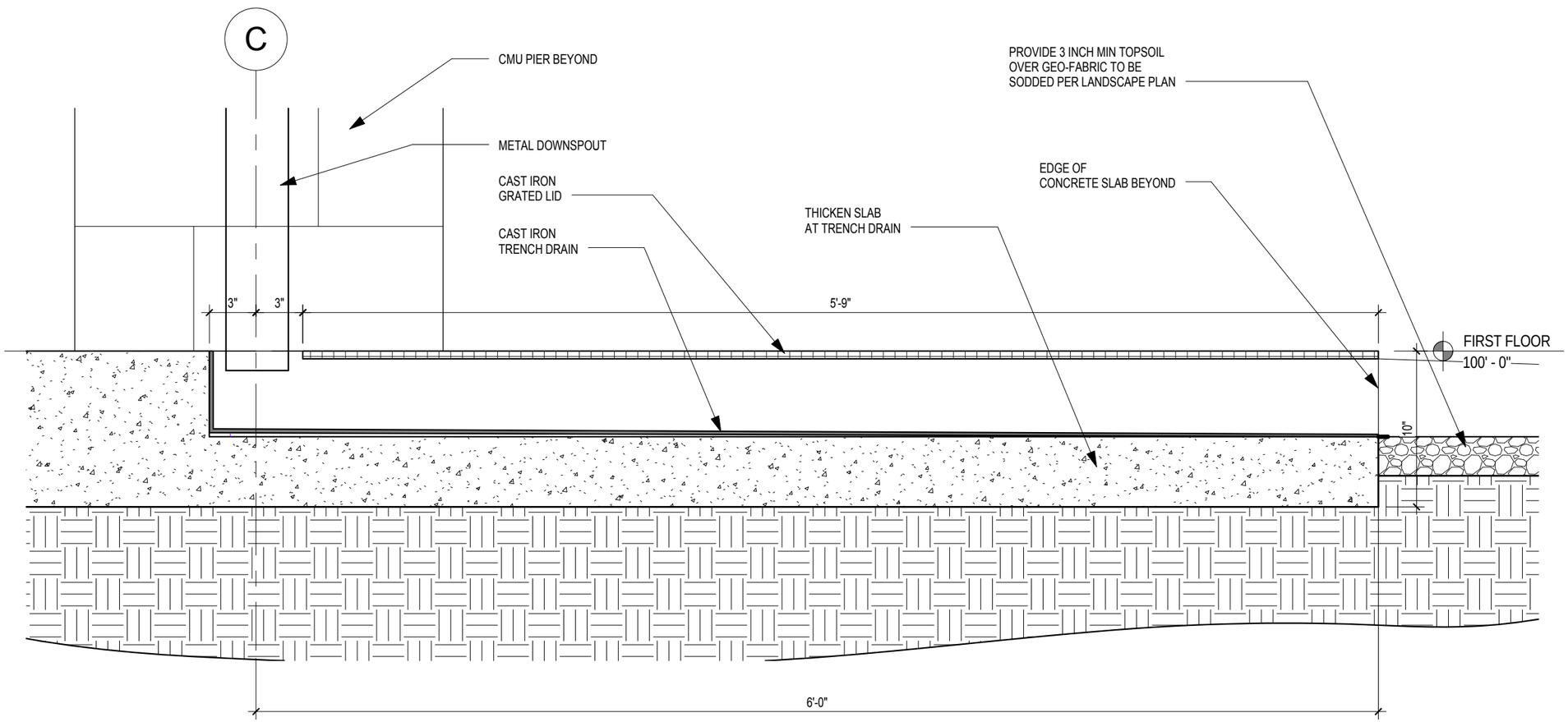

1 DETAIL

1 1/2" = 1'-0"

DORSCHNER ASSOCIATES

Architecture
Planning

Dorschner|Associates, Inc.
849 E. Washington Ave., Ste. 112
Madison, Wisconsin 53703

ISSUED

PROJECT
MONONA SCHLUTER PARK
RESTROOMS
4500 WINNEQUAH ROAD
MONONA, WI 53716

PROJECT NO.
14013-00

DRAWING
EXTERIOR DETAILS

DATE
02.16.15

A606

TOILET ACCESSORY SCHEDULE

ABBREVIATION	ITEM	MOUNTING HEIGHT
BCS	BAY CHANGING STATION	TOP OF EXTENDED STATION AT 2'-10" AFF
FD	FLOOR DRAIN	SEE PLUMBING SPECIFICATION BY PLUMBING CONTRACTOR
GB18	18" VERTICAL GRAB BAR	BOTTOM AT 3'-4" AFF
GB36	36" HORIZONTAL GRAB BAR	CENTER AT 2'-9 3/4" AFF
GB42	42" HORIZONTAL GRAB BAR	CENTER AT 2'-9 3/4" AFF
LAV	SINK (LAVATORY)	TYP. TOP AT 2'-10" AFF
SS MIRROR	MIRROR 24" WIDE BY 36" TALL	BOTTOM OF REFLECTIVE SURFACE AT 3'-4" MAX. AFF
SD	SOAP DISPENSER	42" AFF TO SOAP ACTIVATION MECHANISM OWNER FURNISHED CONTRACTOR INSTALLED
WAD	WARM AIR DRYER	42" AFF TO ACTIVATION MECHANISM
TPH	TOILET PAPER HOLDER	OUTLET IS 15" MIN. 48" MAX.AFF, IN FRONT OF WC CL OWNER FURNISHED CONTRACTOR INSTALLED
WC	WATER CLOSET	SEE PLUMBING SEE INTERIOR ELEVATIONS FOR ACCESSIBLE WC, BY PLUMBING CONTRACTOR
UW	WALL MOUNTED URINAL	SEE PLUMBING SEE INTERIOR ELEVATIONS FOR ACCESSIBLE WC, BY PLUMBING CONTRACTOR

REFER TO SHEET G101 FOR SPECIFICATIONS FOR SOME ITEMS

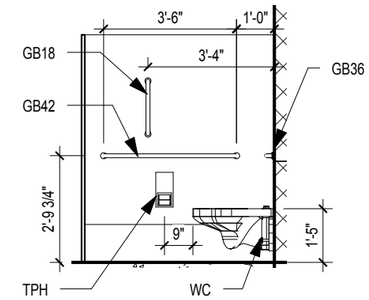

2 ELEVATION
1/4" = 1'-0"

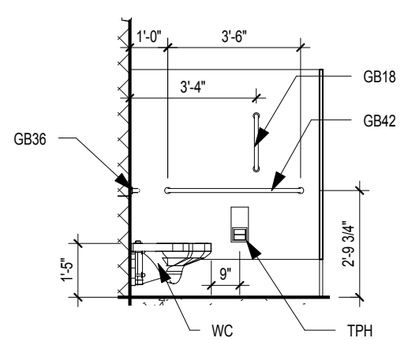

3 ELEVATION
1/4" = 1'-0"

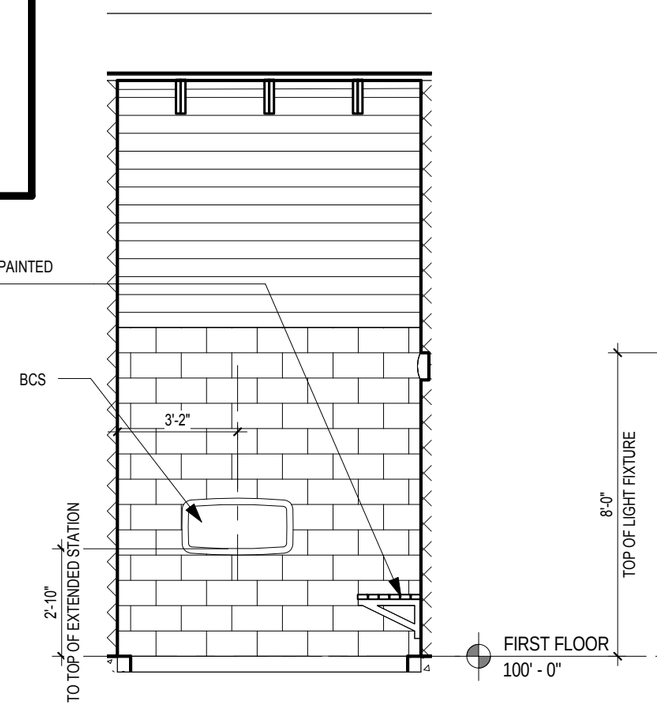

4 ELEVATION
1/4" = 1'-0"

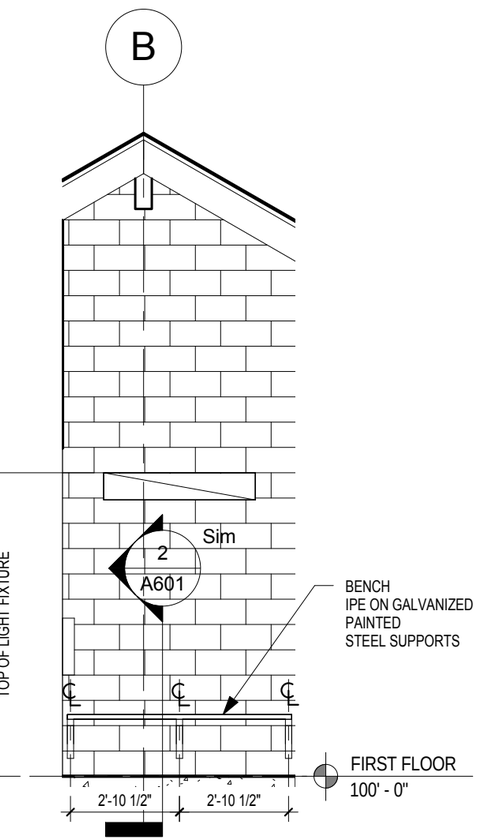

1 ELEVATION
1/4" = 1'-0"

GENERAL NOTES:

REFER TO G101-G202
FOR SCHEDULES AND NOTES

DORSCHNER ASSOCIATES

Architecture
Planning

Dorschner|Associates, Inc.
849 E. Washington Ave., Ste. 112
Madison, Wisconsin 53703

ISSUED

02.16.15 CONSTRUCTION DOCUMENTS

PROJECT
MONONA SCHLUTER PARK
RESTROOMS
4500 WINNEQUAH ROAD
MONONA, WI 53716

PROJECT NO.
14013-00

DRAWING
INTERIOR ELEVATIONS

DATE
02.16.15

A800

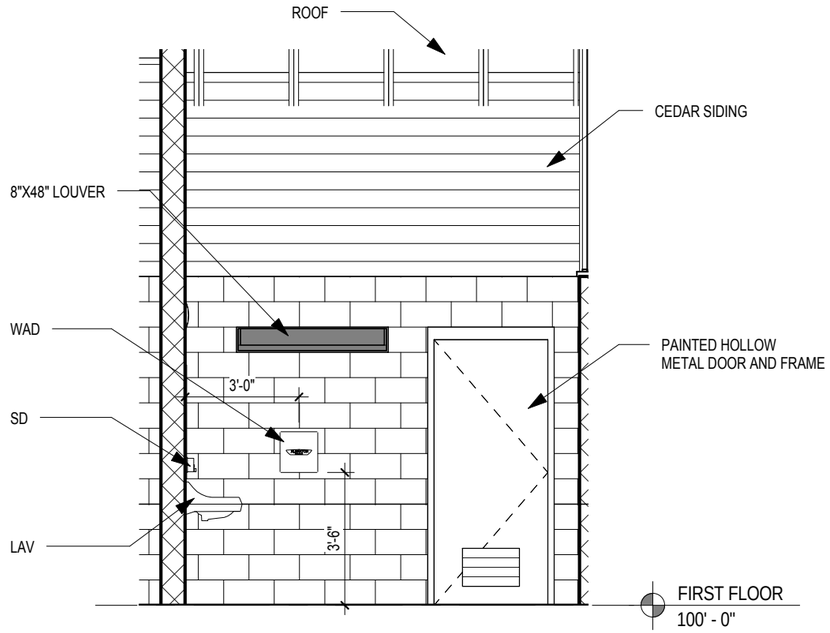

4 ELEVATION
1/4" = 1'-0"

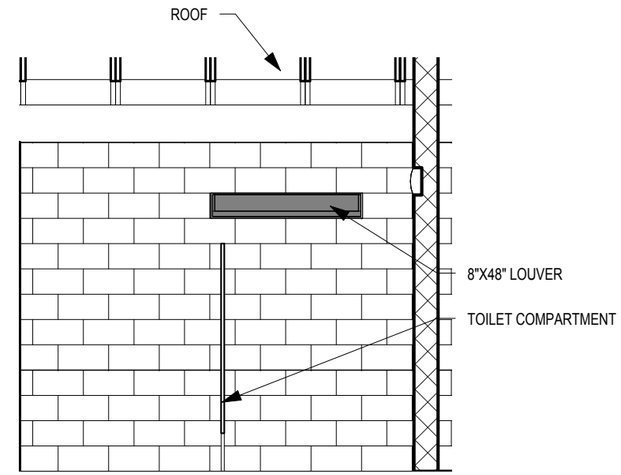

2 ELEVATION
1/4" = 1'-0"

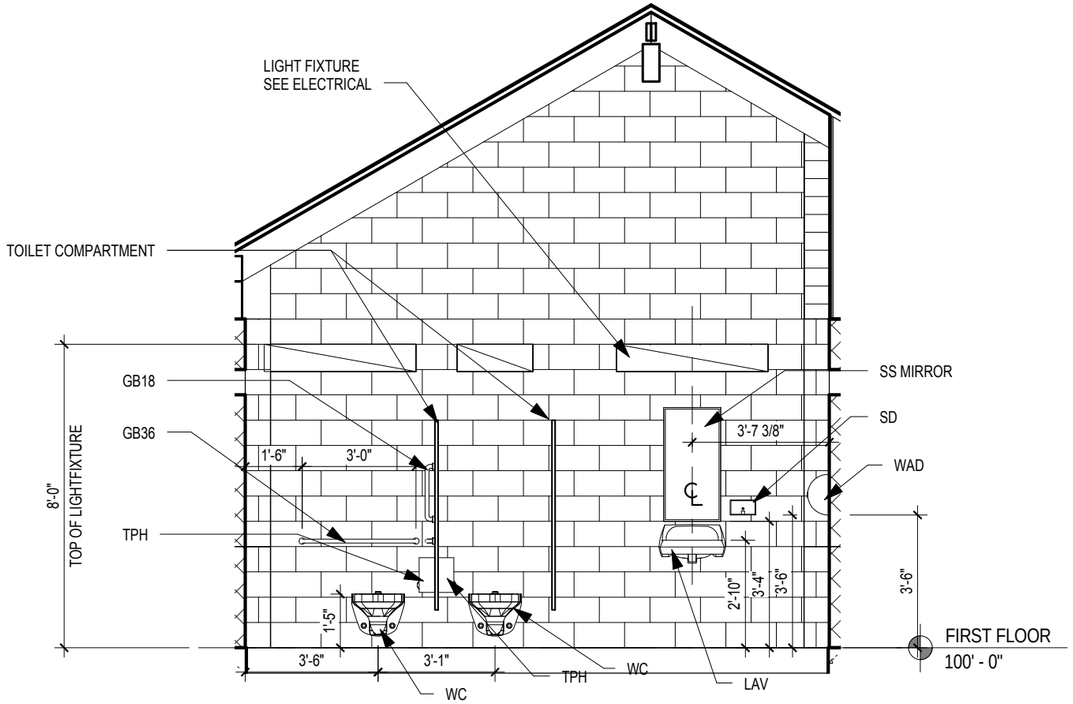

3 ELEVATION
1/4" = 1'-0"

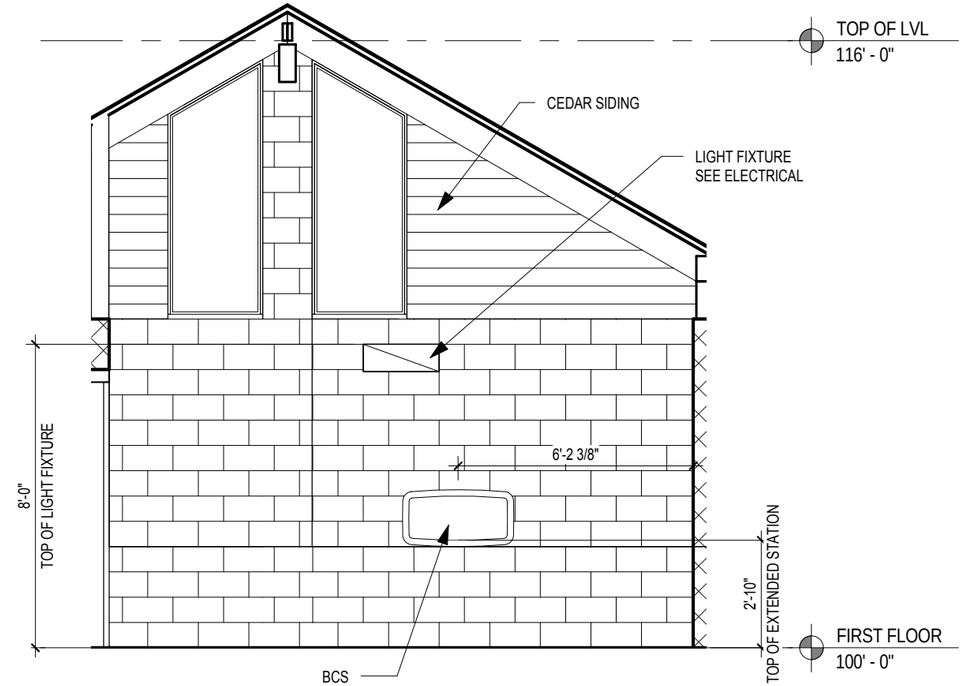

1 ELEVATION
1/4" = 1'-0"

GENERAL NOTES:

REFER TO G101-G202
FOR SCHEDULES AND NOTES

DORSCHNER ASSOCIATES
Architecture
Planning

Dorschner|Associates, Inc.
849 E. Washington Ave., Ste. 112
Madison, Wisconsin 53703

ISSUED

02.16.15 CONSTRUCTION DOCUMENTS

PROJECT
MONONA SCHLUTER PARK
RESTROOMS
4500 WINNEQUAH ROAD
MONONA, WI 53716

PROJECT NO.
14013-00

DRAWING
INTERIOR ELEVATIONS

DATE
02.16.15

A801

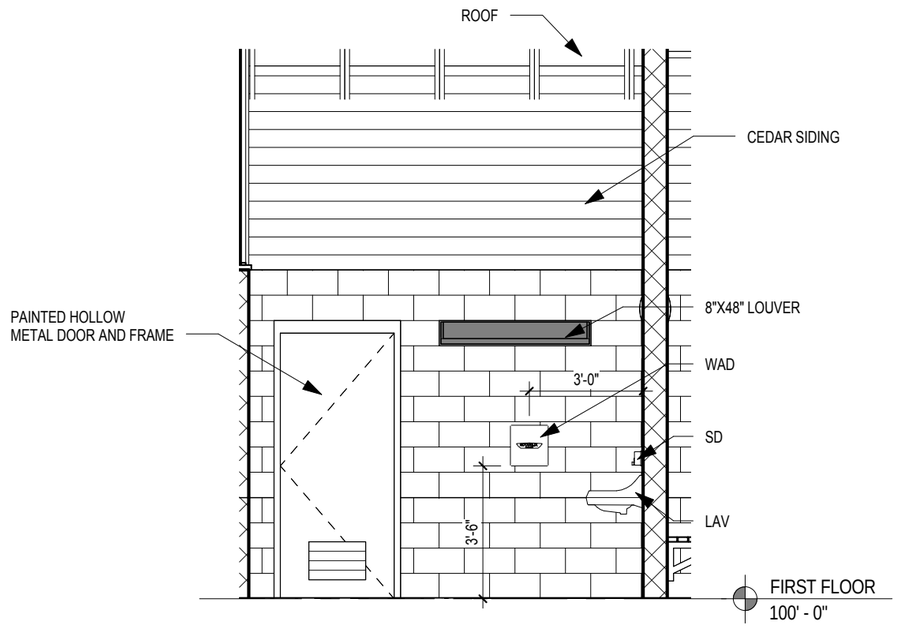

4 ELEVATION
1/4" = 1'-0"

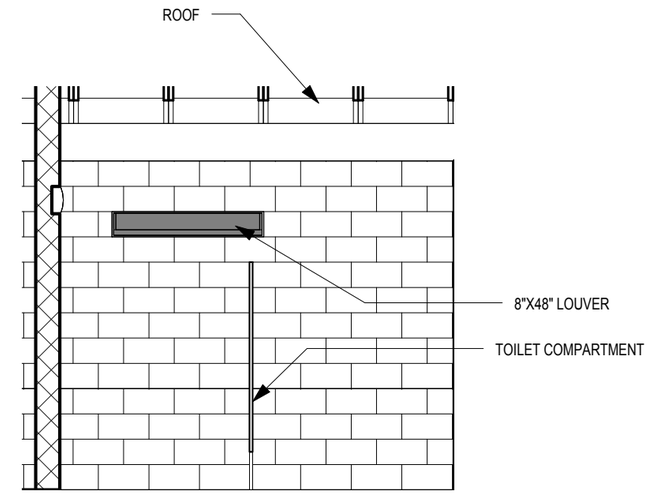

2 ELEVATION
1/4" = 1'-0"

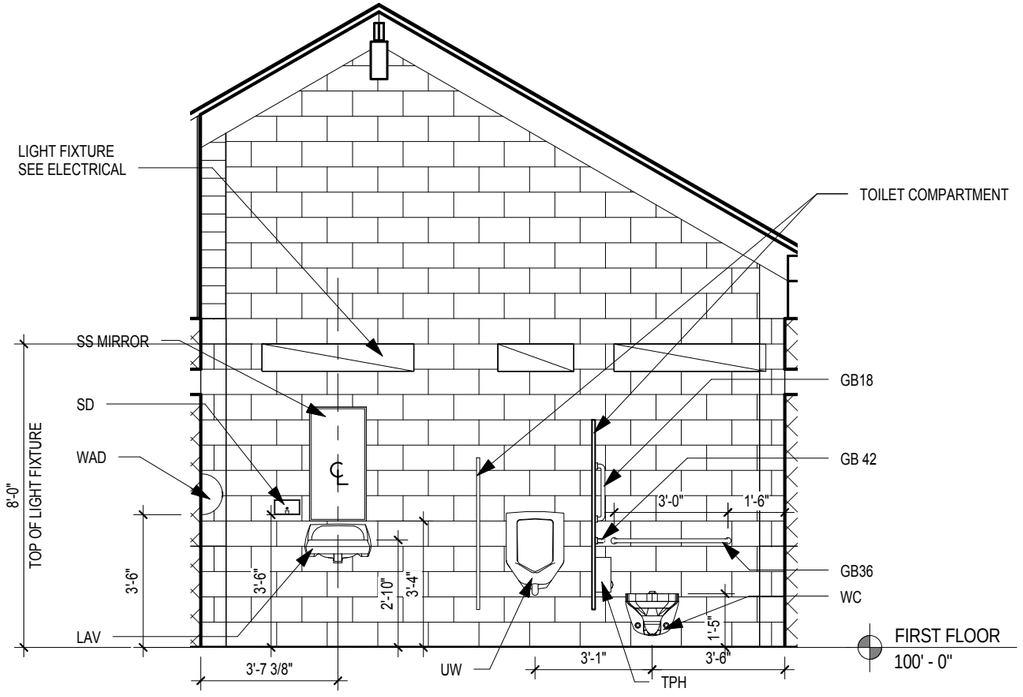

3 ELEVATION
1/4" = 1'-0"

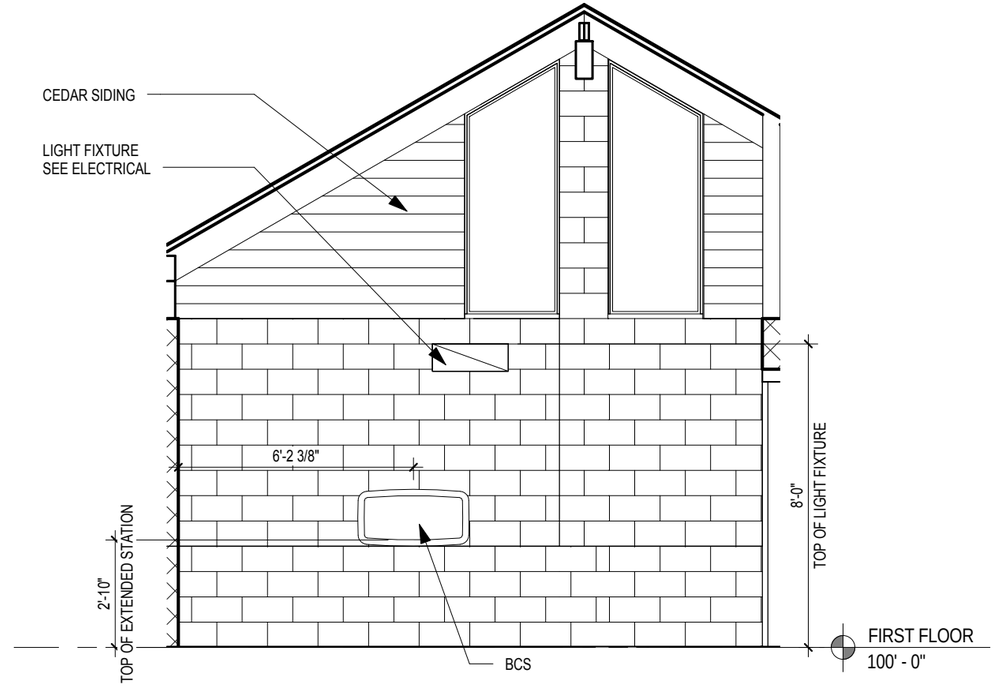

1 ELEVATION
1/4" = 1'-0"

GENERAL NOTES:

REFER TO G101-G202
FOR SCHEDULES AND NOTES

DORSCHNER ASSOCIATES

Architecture
Planning

Dorschner|Associates, Inc.
849 E. Washington Ave., Ste. 112
Madison, Wisconsin 53703

ISSUED

02.16.15 CONSTRUCTION DOCUMENTS

PROJECT
MONONA SCHLUTER PARK
RESTROOMS
4500 WINNEQUAH ROAD
MONONA, WI 53716

PROJECT NO.
14013-00

DRAWING
INTERIOR ELEVATIONS

DATE
02.16.15

A802

DESIGN DATA

DESIGN CODE:
INTERNATIONAL BUILDING CODE 2009 (IBC)

WIND LOAD INFORMATION:

BASIC WIND SPEED	90 MPH		
BUILDING OCCUPANCY CATEGORY	U		
WIND LOAD IMPORTANCE FACTOR (Iw)	1.00		
WIND EXPOSURE	B		
INTERNAL PRESSURE COEFFICIENTS	Ñ .18		
COMPONENTS AND CLADDING (GROSS WIND PRESSURES):			
(FOR ZONE DEFINITIONS & DIAGRAMS SEE DESIGN GUIDE ASCE/SEI 7 SECTION 6)			
WIDTH OF PRESSURE COEFFICIENT ZONE (a)	3.0 ft		
TRIBUTARY WIND LOAD AREAS:	10 ft^2	100 ft^2	500 ft^2
ROOF (GABLE/HIP/MONOSLOPE):			
NEGATIVE ZONE 1	-14.6 psf	-12.1 psf	---
NEGATIVE ZONE 2	-14.6 psf	-14.6 psf	---
NEGATIVE ZONE 3	-17.0 psf	-14.6 psf	---
POSITIVE PRESSURE ALL ZONES	13.3 psf	12.1 psf	---
WALLS:			
ZONE 4	-15.8 psf	---	-12.1 psf
ZONE 5	-19.5 psf	---	-12.1 psf

SEISMIC LOAD INFORMATION:

SEISMIC USE GROUP / OCCUPANCY CATEGORY	II
SEISMIC LOAD IMPORTANCE FACTOR (Ie)	1.00
SEISMIC SITE CLASS	D
MAPPED SPECTRAL RESPONSE ACCELERATION (Ss)	0.108
MAPPED SPECTRAL RESPONSE ACCELERATION (S1)	0.045
SPECTRAL RESPONSE COEFFICIENT (Sds)	0.115
SPECTRAL RESPONSE COEFFICIENT (Sd1)	0.072
SEISMIC DESIGN CATEGORY	B
BASIC SEISMIC FORCE RESISTING SYSTEM	ORDINARY REINFORCED MASONRY SHEAR WALLS
RESPONSE MODIFICATION FACTOR	2
SEISMIC RESPONSE COEFFICIENT (Cs)	0.058
DESIGN BASE SHEAR	0.058W
ANALYSIS PROCEDURE	EQUIVALENT LATERAL FORCE

SNOW LOAD INFORMATION:

GROUND SNOW LOAD (Pg)	30 psf
SNOW EXPOSURE FACTOR (Ce)	1.00
SNOW LOAD IMPORTANCE FACTOR (Is)	1.00
THERMAL FACTOR (Ct)	1.20
FLAT ROOF SNOW LOAD (Pf)	25.2 psf
DESIGN/BALANCED SNOW LOAD (Ps)	25.2 psf + DRIFT

SOIL LOAD INFORMATION:

COEFFICIENT OF SLIDING FRICTION (μ)	0.40
LATERAL EARTH PRESSURE:	
ACTIVE	45 pcf
AT-REST	65 pcf
PASSIVE	200 pcf
ALLOWABLE NET SOIL BEARING PRESSURE	Qa = 2,000psf

LIVE LOADS:

CORRIDOR	100 psf
MECHANICAL	125 psf
PUBLIC AREA	100 psf
STORAGE	125 psf

MATERIAL DESIGN PROPERTIES

CIP CONCRETE STRENGTHS:

FOOTINGS	f'c = 3000 psi
CONCRETE WALLS / PIERS / COLUMNS	f'c = 4000 psi
SLAB ON GRADE	f'c = 4000 psi

REINFORCING STEEL STRENGTHS:

BARS (ASTM A 615, grade 60)	Fy = 60,000 psi
WWF (ASTM A 185)	Fy = 65,000 psi

STRUCTURAL MASONRY STRENGTHS:

ASTM C 90, grade N (CMU)	f'm = 1500 psi
MORTAR (ASTM C 270):	
TYPE M (BELOW GRADE)	fu = 2500 psi
TYPE S (ABOVE GRADE)	fu = 1800 psi
GROUT (ASTM C 476):	
BOND BEAMS (pea gravel)	f'c = 3000 psi
MASONRY WALLS AND PIERS (pea gravel)	f'c = 3000 psi

WOOD STRENGTHS:

DIMENSIONAL LUMBER (SEE PLANS & WOOD FRAMING NOTES)	
LAMINATED VENEER LUMBER:	E = 1,900 ksi
	Fb = 2,600 psi
	Fv = 285 psi
	Fc(perp) = 750 psi
	Fc(para) = 2,510 psi

DORSCHNER ASSOCIATES
Architecture
Planning

Dorschner|Associates, Inc.
849 E. Washington Ave., Ste. 112
Madison, Wisconsin 53703

ISSUED
02.16.15 CONSTRUCTION DOCUMENTS

FOR PRELIMINARY USE ONLY
NOT FOR CONSTRUCTION

PIERCE ENGINEERS INC
CONSULTING STRUCTURAL ENGINEERS
10 West Mifflin St, Suite 205 | Madison, WI 53703
Phone: 608.256.7304 | Fax: 608.256.7306
PE PROJECT 14629

PROJECT
MONONA SCHLUTER PARK RESTROOMS
4500 WINNEQUAH ROAD
MONONA, WI 53716

PROJECT NO.
14013-00

DRAWING
STRUCTURAL NOTES

DATE
02.16.15

S000

STRUCTURAL ABBREVIATIONS

ABBRV.	WORD OR PHRASE
@	AT
&	AND
AB	ANCHOR BOLT
ALT	ALTERNATE
APA	AMERICAN PLYWOOD ASSOC.
ARCH	ARCHITECT(URAL)
BC	BOTTOM CHORD
BLDG	BUILDING
BLKG	BLOCKING
BM	BEAM
BOT	BOTTOM
BRG	BEARING
℄	CENTERLINE
CB	COLUMN BASE
CIP	CAST-IN-PLACE
CL	CENTERLINE
CLR	CLEAR
CJ	CONTROL OR CONSTRUCTION JOINT
CMU	CONCRETE MASONRY UNIT
COL	COLUMN
CONC	CONCRETE
CONT	CONTINUOUS
DBA	DECK BEARING ANGLE
DEMO	DEMOLITION
DIA (Ø)	DIAMETER
DIM	DIMENSION
DL	DEAD LOAD
DTL	DETAIL
DWL	DOWEL
DWG	DRAWING
EA	EACH
EF	EACH FACE
EL	ELEVATION
EMBED	EMBEDMENT
EQ	EQUAL
EW	EACH WAY
EXIST	EXISTING
EXP	EXPANSION
EXT	EXTERIOR
FD	FLOOR DRAIN
FND	FOUNDATION
FF	FINISH FLOOR
FLR	FLOOR
FRMG	FRAMING
FTG	FOOTING
GA	GAGE
GALV.	GALVANIZED
GC	GENERAL CONTRACTOR
GT	GIRDER TRUSS
GYP	GYPSUM
HORIZ	HORIZONTAL
HSS	HOLLOW STRUCTURAL SECTION
HT	HEIGHT
HVAC	HEATING, VENTILATING & AIR COND.
HWS	HEADED WELD STUD
INFO	INFORMATION
JST	JOIST
KSI	KIPS PER SQUARE INCH
L	ANGLE

ABBRV.	
LL	LIVE LOAD
LLH	LONG LEG HORIZONTAL
LLV	LONG LEG VERTICAL
LSL	LAMINATED STRAND LUMBER
LVL	LAMINATED VENEER LUMBER
LW	LONG WAY
MFR	MANUFACTURER
MAX	MAXIMUM
MECH	MECHANICAL
MIN	MINIMUM
MISC	MISCELLANEOUS
NIC	NOT IN CONTRACT
NTS	NOT TO SCALE
OC	ON CENTER
OPP	OPPOSITE
PARA	PARALLEL
PERP	PERPENDICULAR
℞	STEEL PLATE
PLY	PLYWOOD
PSI	POUNDS PER SQUARE INCH
PSF	POUNDS PER SQUARE FOOT
PSL	PARALLEL STRAND LUMBER
P/T	POST TENSIONED CONCRETE
PT	PRESSURE TREATED
REINF	REINFORCEMENT
REQD	REQUIRED
RTU	ROOF TOP UNIT
SCHD	SCHEDULE
SHT	SHEET
SIM	SIMILAR
SOG	SLAB ON GRADE
SPEC	SPECIFICATION
SPF	SPRUCE-PINE-FIR
SQ	SQUARE
SS	STAINLESS STEEL
STL	STEEL
STR	STRUCTURAL
SW	SHORT WAY
SYP	SOUTHERN YELLOW PINE
T&B	TOP AND BOTTOM
TC	TOP CHORD
T&G	TONGUE AND GROOVE
TF	TOP OF FOOTING ELEVATION
TL	TOP OF LEDGE ELEVATION
TOS	TOP OF SLAB ELEVATION
TOS	TOP OF STEEL ELEVATION
TP	TOP OF PIER ELEVATION
TRANS	TRANSVERSE
TS	TUBE STEEL
TW	TOP OF WALL ELEVATION
TYP	TYPICAL
UNO	UNLESS NOTED OTHERWISE
VERT	VERTICAL
w/	WITH
WF	WIDE FLANGE
w/o	WITHOUT
WP	WORKPOINT
WT	WEIGHT
WWF	WELDED WIRE FABRIC

EARTHWORK NOTES

1. ALLOWABLE SOIL BEARING PRESSURE Qa = 2000 psf IS BASED ON THE GEOTECHNICAL INVESTIGATION REPORT PREPARED BY CGC, INC. (REPORT #C14448, DATED 11/05/2014.
2. COMPLIANCE OF SOIL COMPACTION AND MEASURES TAKEN TO ACHIEVE ALLOWABLE BEARING PRESSURE SHALL BE FIELD VERIFIED BY A QUALIFIED SOILS ENGINEER PRIOR TO PLACEMENT OF SLAB OR FOUNDATIONS.
3. ALL TOPSOIL, DEBRIS, SILTS, AND ORGANIC MATERIAL SHALL BE STRIPPED AND REMOVED FROM LIMITS OF EXCAVATIONS AND EXISTING SUBGRADE SHALL BE COMPACTED TO 95% STANDARD PROCTOR MAXIMUM DRY DENSITY PRIOR TO PLACEMENT OF FILL MATERIAL
4. FILL MATERIAL SHALL BE PLACED AND COMPACTED IN LIFTS NO THICKER THAN 8". EACH LIFT SHALL MEET COMPACTION REQUIREMENTS PRIOR TO PLACEMENT AND COMPACTION OF ADDITIONAL LIFTS.
5. FILL MATERIAL SHALL BE PLACED AND COMPACTED AT +1% TO -4% OPTIMUM MOISTURE CONTENT TO 95% STANDARD PROCTOR MAXIMUM DRY DENSITY, UNLESS RECOMMENDED OTHERWISE BY A QUALIFIED SOILS ENGINEER.
6. UNSATISFACTORY SOILS LOCATED BELOW FOUNDATIONS SHALL BE REMOVED AND REPLACED AS DIRECTED BY THE SOILS ENGINEER.

GENERAL FOUNDATION NOTES

1. PROTECT IN-PLACE FOUNDATIONS AND SLABS ON GRADE FROM FROST PENETRATION UNTIL PROJECT COMPLETION
2. VERIFY w/ ARCHITECTURAL DRAWINGS OR PLUMBING DRAWINGS FOR FLOOR DRAIN LOCATIONS & ELEVATIONS.
3. NO PROVISIONS HAVE BEEN MADE FOR FUTURE EXPANSION.

DORSCHNER ASSOCIATES

Architecture
Planning

Dorschner|Associates, Inc.
849 E. Washington Ave., Ste. 112
Madison, Wisconsin 53703

ISSUED

02.16.15 CONSTRUCTION DOCUMENTS

FOR PRELIMINARY USE ONLY
NOT FOR CONSTRUCTION

PIERCE ENGINEERS INC
CONSULTING STRUCTURAL ENGINEERS
10 West Mifflin St, Suite 205 | Madison, WI 53703
Phone: 608.256.7304 | Fax: 608.256.7306
PE PROJECT 14629

PROJECT
MONONA SCHLUTER PARK RESTROOMS
4500 WINNEQUAH ROAD
MONONA, WI 53716

PROJECT NO.
14013-00

DRAWING
STRUCTURAL NOTES

DATE
02.16.15

S001

SECTION 03300 - CAST-IN-PLACE CONCRETE

PART 1 - GENERAL

A. SUMMARY
1. THIS SECTION SPECIFIES CAST-IN-PLACE CONCRETE INCLUDING FORMWORK, REINFORCEMENT, CONCRETE MATERIALS, MIXTURE DESIGN, PLACEMENT PROCEDURES AND FINISHES.

B. SUBMITTALS
1. PRODUCT DATA: FOR EACH TYPE OF PRODUCT INDICATED.
2. DESIGN MIXTURES: FOR EACH CONCRETE MIXTURE.
3. STEEL REINFORCEMENT SHOP DRAWINGS: PLACING DRAWINGS THAT DETAIL FABRICATION, BENDING, AND PLACEMENT. INCLUDE BAR SIZES, LENGTHS, MATERIAL, GRADE, BAR SCHEDULES, STIRRUP SPACING, BENT BAR DIAGRAMS, BAR ARRANGEMENT, SPLICES AND LAPS, MECHANICAL CONNECTIONS, TIE SPACING, HOOP SPACING, AND SUPPORTS FOR CONCRETE REINFORCEMENT.
4. FIELD QUALITY-CONTROL TEST REPORTS.
5. MATERIAL CERTIFICATES: FOR EACH OF THE FOLLOWING, SIGNED BY MANUFACTURERS:
   a. CEMENTITIOUS MATERIALS.
   b. ADMIXTURES.
   c. FORM MATERIALS AND FORM-RELEASE AGENTS.
   d. STEEL REINFORCEMENT AND ACCESSORIES.
   e. FIBER REINFORCEMENT.
   f. WATERSTOPS.
   g. CURING COMPOUNDS.
   h. VAPOR BARRIERS.
   i. SEMIRIGID JOINT FILLER.
   j. JOINT-FILLER STRIPS.
   k. REPAIR MATERIALS.

C. QUALITY ASSURANCE
1. MANUFACTURER QUALIFICATIONS: A FIRM EXPERIENCED IN MANUFACTURING READY-MIXED CONCRETE PRODUCTS AND THAT COMPLIES WITH ASTM C 94/C 94M REQUIREMENTS FOR PRODUCTION FACILITIES AND EQUIPMENT.
   a. MANUFACTURER CERTIFIED ACCORDING TO NRMCA's "CERTIFICATION OF READY MIXED CONCRETE PRODUCTION FACILITIES."
2. ACI PUBLICATIONS: COMPLY WITH THE FOLLOWING UNLESS MODIFIED BY REQUIREMENTS IN THE CONTRACT DOCUMENTS.
   a. ACI 301, "SPECIFICATION FOR STRUCTURAL CONCRETE"
   b. ACI 117, "SPECIFICATIONS FOR TOLERANCES FOR CONCRETE CONSTRUCTION AND MATERIALS"
   c. ACI 318, LATEST PROVISIONS.

PART 2 - PRODUCTS

A. FORM-FACING MATERIALS
1. SMOOTH-FORMED FINISHED CONCRETE: FORM-FACING PANELS THAT WILL PROVIDE CONTINUOUS, TRUE, AND SMOOTH CONCRETE SURFACES. FURNISH IN LARGEST PRACTICABLE SIZES TO MINIMIZE NUMBER OF JOINTS.
2. ROUGH-FORMED FINISHED CONCRETE: PLYWOOD, LUMBER, METAL, OR ANOTHER APPROVED MATERIAL. PROVIDE LUMBER DRESSED ON AT LEAST TWO EDGES AND ONE SIDE FOR TIGHT FIT.

B. STEEL REINFORCEMENT
1. REINFORCING BARS: ASTM A 615/A 615M GRADE 60, DEFORMED.
2. PLAIN-STEEL WELDED WIRE REINFORCEMENT: ASTM A 185, PLAIN, FABRICATED FROM AS-DRAWN STEEL WIRE INTO FLAT SHEETS.
3. DEFORMED-STEEL WELDED WIRE REINFORCEMENT: ASTM A497, FLAT SHEET.
4. BAR SUPPORTS: BOLSTERS, CHAIRS, SPACERS, AND OTHER DEVICES FOR SPACING, SUPPORTING, AND FASTENING REINFORCING BARS AND WELDED WIRE REINFORCEMENT IN PLACE. MANUFACTURE BAR SUPPORTS FROM STEEL WIRE, PLASTIC, OR PRECAST CONCRETE ACCORDING TO CRSI "MANUAL OF STANDARD PRACTICE."
   a. FOR CONCRETE SURFACES EXPOSED TO VIEW WHERE LEGS OF WIRE BAR SUPPORTS CONTACT FORMS, USE CRSI CLASS 1 PLASTIC-PROTECTED STEEL WIRE OR CRSI CLASS 2 STAINLESS-STEEL BAR SUPPORTS.

C. CONCRETE MATERIALS
1. CEMENTITIOUS MATERIAL: USE THE FOLLOWING CEMENTITIOUS MATERIALS, OF THE SAME TYPE, BRAND, AND SOURCE THROUGHOUT PROJECT.
   a. PORTLAND CEMENT: ASTM C 150, TYPE I/II. SUPPLEMENT WITH THE FOLLOWING:
      - FLY ASH: ASTM C 618, CLASS C
      - GROUND GRANULATED BLAST-FURNACE SLAG: ASTM C 989, GRADE 100 OR 120
2. NORMAL-WEIGHT AGGREGATES: ASTM C 33 FREE OF MATERIALS WITH DELETERIOUS REACTIVITY TO ALKALI IN CEMENT.
3. WATER: ASTM C 94/C 94 M AND POTABLE.
4. AIR ENTRAINING ADMIXTURE: ASTM C 260.
5. CHEMICAL ADMIXTURES: PROVIDE ADMIXTURES CERTIFIED BY MANUFACTURER TO BE COMPATIBLE WITH OTHER ADMIXTURES AND THAT WILL NOT CONTRIBUTE WATER-SOLUBLE CHLORIDE IONS EXCEEDING THOSE PERMITTED IN HARDENED CONCRETE. DO NOT USE CALCIUM CHLORIDE OR ADMIXTURES CONTAINING CALCIUM CHLORIDE.
   a. WATER-REDUCING ADMIXTURE: ASTM C 494/C 494M, TYPE A.
   b. RETARDING ADMIXTURE: ASTM C 494/C 494M, TYPE B.
   c. WATER-REDUCING AND RETARDING ADMIXTURE: ASTM C 494/C 494M, TYPE D.
   d. HIGH RANGE, WATER-REDUCING ADMIXTURE: ASTM C 494/C 494M, TYPE F.
   e. HIGH RANGE, WATER REDUCING AND RETARDING ADMIXTURE: ASTM C 494/C 494 M, TYPE G.
   f. PLASTICIZING AND RETARDING ADMIXTURE: ASTM C 1017/C 1017M, TYPE II.

D. CURING MATERIALS
1. EVAPORATION RETARDER: WATERBORNE, MONOMOLECULAR FILM FORMING, MANUFACTURED FOR APPLICATION TO FRESH CONCRETE.
2. ABSORPTIVE COVER: AASHTO M 182, CLASS 2, BURLAP CLOTH MADE FROM JUTE OR KENAF, WEIGHING APPROXIMATELY 9 oz/sq yd WHEN DRY.
3. MOISTURE-RETAINING COVER: ASTM C 171, POLYETHYLENE FILM OR WHITE BURLAP-POLYETHYLENE SHEET.
4. WATER: POTABLE.
5. CLEAR, WATERBORNE, MEMBRANE-FORMING CURING COMPOUND: ASTM C 309 TYPE 1, CLASS B, DISSIPATING.
6. CLEAR, WATERBORNE, MEMBRANE-FORMING CURING COMPOUND: ASTM C 309, TYPE 1, CLASS B, NONDISSIPATING, CERTIFIED BY CURING COMPOUND MANUFACTURER TO NOT INTERFERE WITH BONDING OF FLOOR COVERING.
7. CLEAR, SOLVENT-BORNE, MEMBRANE-FORMING CURING AND SEALING COMPOUND: ASTM C 1315, TYPE 1, CLASS A.
8. CLEAR, WATERBORNE, MEMBRANE-FORMING CURING AND SEALING COMPOUND: ASTM C 1315, TYPE 1, CLASS A.

E. RELATED MATERIALS
1. EXPANSION AND ISOLATION JOINT FILLER STRIPS: ASTM D 1751, ASPHALT-SATURATED CELLULOSIC FIBER OR ASTM D 1752, CORK OR SELF-EXPANDING CORK.

F. CONCRETE MIXTURES
1. PREPARE DESIGN MIXTURES FOR EACH TYPE AND STRENGTH OF CONCRETE, PROPORTIONED ON THE BASIS OF LABORATORY TRIAL MIXTURE OR FIELD TEST DATA, OR BOTH, ACCORDING TO ACI 301.

DORSCHNER ASSOCIATES
Architecture
Planning

Dorschner|Associates, Inc.
849 E. Washington Ave., Ste. 112
Madison, Wisconsin 53703

ISSUED

02.16.15 CONSTRUCTION DOCUMENTS

FOR PRELIMINARY USE ONLY
NOT FOR CONSTRUCTION

PIERCE ENGINEERS INC
CONSULTING STRUCTURAL ENGINEERS
10 West Mifflin St, Suite 205 | Madison, WI 53703
Phone: 608.256.7304 | Fax: 608.256.7306
PE PROJECT 14629

PROJECT
MONONA SCHLUTER PARK RESTROOMS
4500 WINNEQUAH ROAD
MONONA, WI 53716

PROJECT NO.
14013-00

DRAWING
STRUCTURAL NOTES

DATE
02.16.15

S002

CONCRETE MIX DESIGN SCHEDULE

TYPE OF CONSTRUC-TION	28 DAY STRENGTH (psi) (ASTM C39)	MAX SLUMP ±1" (INCHES) (ASTM C143) (D)	MAXIMUM AGGREGATE SIZE (INCH)	PERCENT OF AIR ENTRAINING ± 1-1/2%	MAXIMUM WATER / CEMENTITIOUS MATERIAL RATIO	MINIMUM CEMENTITIOUS MATERIALS PER CUBIC YARD	ADD'L REMARKS
FOOTINGS	4000	4	1-1/2	--	--	--	(A)
FOUNDATION WALLS	4000	4	1	4-1/2	--	--	(A)
CONCRETE PIERS, WALLS, AND SHEAR WALLS	4000	4	1	--	--	--	(A)
EXTERIOR SLAB ON GRADE	4500	3	1	6	0.45	520	(B), (E)

COMMENTS:

A. MAXIMUM REPLACEMENT OF CEMENTICIOUS MATERIALS BY WEIGHT FLY ASH 25%, SLAG 50%, LIMIT TOTAL REPLACEMENT OF CEMENTICIOUS MATERIALS TO 50%.

B. MAXIMUM REPLACEMENT OF CEMENTICIOUS MATERIALS BY WEIGHT FLY ASH 15%, SLAG 30%, LIMIT TOTAL REPLACEMENT OF CEMENTICIOUS MATERIALS TO 30%.

C. PROVIDE 4-1/2% AIR ENTRAINMENT AT EXPOSED CONDITIONS.

D. SLUMP MAY BE INCREASED WHEN CHEMICAL ADMIXTURES ARE USED, PROVIDE THAT THE ADMIXTURE TREATED CONCRETE HAS THE SAME OR LOWER WATER-CEMENT RATIO AND DOES NOT EXHIBIT SEGREGATION POTENTIAL OR EXCESSIVE BLEEDING.

E. CONCRETE SUPPLIER AND FINISHER SHALL COORDINATE APPROXIMATE SET TIMES OF PROPOSED MIX DESIGN UNDER VARIOUS WEATHER CONDITIONS AND ADJUST MIX DESIGN AS NECESSARY TO ASSURE SET TIME IS ACCEPTABLE TO COMPLETE PLACING AND FINISHING OF SLAB IN A TIMELY MANNER.

A. FABRICATING REINFORCEMENT
   1. FABRICATE STEEL REINFORCEMENT ACCORDING TO CRSI's "MANUAL OF STANDARD PRACTICE."

B. CONCRETE MIXING
   1. READY-MIXED CONCRETE: MEASURE, BATCH, MIX, AND DELIVER CONCRETE ACCORDING TO ASTM C 94/C 94M AND ASTM C 1116, AND FURNISH BATCH TICKET INFORMATION.
      a. WHEN AIR TEMPERATURE IS BETWEEN 85 AND 90ÁF, REDUCE MIXING AND DELIVERY TIME FROM 1-1/2 HOURS TO 75 MINUTES; WHEN AIR TEMPERATURE IS ABOVE 90ÁF, REDUCE MIXING AND DELIVERY TIME TO 60 MINUTES.

PART 3 - EXECUTION

A. FORMWORK
   1. DESIGN, ERECT, SHORE, BRACE, AND MAINTAIN FORMWORK ACCORDING TO ACI 301 TO SUPPORT VERTICAL, LATERAL, STATIC, AND DYNAMIC LOADS, AND CONSTRUCTION LOADS THAT MIGHT BE APPLIED, UNTIL STRUCTURE CAN SUPPORT SUCH LOADS.
   2. CONSTRUCT FRAMEWORK SO CONCRETE MEMBERS AND STRUCTURES ARE OF SIZE, SHAPE, ALIGNMENT, ELEVATION, AND POSITION INDICATED, WITHIN TOLERANCE LIMITS OF ACI 117.
   3. CHAMFER EXTERIOR CORNERS AND EDGES OF PERMANENTLY EXPOSED CONCRETE. WALLS AND COLUMNS IN STAIRWELLS WILL NOT HAVE A CHAMFER.

B. EMBEDDED ITEMS
   1. PLACE AND SECURE ANCHORAGE DEVICES AND OTHER EMBEDDED ITEMS REQUIRED FOR ADJOINING WORK THAT IS ATTACHED TO OR SUPPORTED BY CAST-IN-PLACE CONCRETE. USE SETTING DRAWINGS, TEMPLATES, DIAGRAMS, INSTRUCTIONS, AND DIRECTIONS FURNISHED WITH ITEMS TO BE EMBEDDED.

C. STEEL REINFORCEMENT
   1. GENERAL: COMPLY WITH CRSI'S "MANUAL OF STANDARD PRACTICE" FOR PLACING REINFORCEMENT
      c. DO NOT CUT OR PUNCTURE VAPOR RETARDER. REPAIR DAMAGE AND RESEAL VAPOR RETARDER BEFORE PLACING CONCRETE.
   2. CLEAN REINFORCEMENT OF LOOSE RUST AND MILL SCALE, EARTH, ICE, AND OTHER FOREIGN MATERIALS THAT WOULD REDUCE BOND TO CONCRETE.
   3. ACCURATELY POSITION, SUPPORT, AND SECURE REINFORCEMENT AGAINST DISPLACEMENT. LOCATE AND SUPPORT REINFORCEMENT WITH BAR SUPPORTS TO MAINTAIN MINIMUM CONCRETE COVER. DO NOT TACK WELD CROSSING REINFORCING BARS.
   4. SET WIRE TIES WITH ENDS DIRECTED INTO CONCRETE, NOT TOWARD EXPOSED CONCRETE SURFACES.
   5. INSTALL WELDED WIRE REINFORCEMENT IN LONGEST PRACTICABLE LENGTHS ON BAR SUPPORTS SPACED TO MINIMIZE SAGGING. LAP EDGES AND ENDS OF ADJOINING SHEETS AT LEAST ONE MESH SPACING. OFFSET LAPS OF ADJOINING SHEET WIDTHS TO PREVENT CONTINUOUS LAPS IN EITHER DIRECTION. LACE OVERLAPS WITH WIRE.

D. JOINTS
   1. GENERAL: CONSTRUCT JOINTS TRUE TO LINE WITH FACES PERPENDICULAR TO SURFACE PLANE OF CONCRETE.
   2. CONSTRUCTION JOINTS: INSTALL SO STRENGTH AND APPEARANCE OF CONCRETE ARE NOT IMPAIRED, AT LOCATIONS INDICATED OR AS APPROVED BY ARCHITECT.
      a. SAWED JOINTS: FORM CONTRACTION JOINTS WITH POWER SAWS EQUIPPED WITH SHATTERPROOF ABRASIVE OR DIAMOND-RIMMED BLADES. CUT 1/8-INCH-WIDE JOINTS INTO CONCRETE WHEN CUTTING ACTION WILL NOT TEAR, ABRADE, OR OTHERWISE DAMAGE SURFACE AND BEFORE CONCRETE DEVELOPS RANDOM CONTRACTION CRACKS. JOINTS SHALL BE CUT WITHIN 24 HOURS OF CONCRETE POUR.

E. CAST-IN-PLACE CONCRETE TOLERANCES
   1. CONCRETE COVER MEASURED PERPENDICULAR FROM THE SURFACE IN DIRECTION OF TOLERANCES:
      - MEMBERS 12" OR LESS — Ñ3/8"
      - MEMBERS OVER 12" — Ñ1/2"
   2. STEEL REINFORCEMENT SPACING SHALL BE WITHIN THE FOLLOWING TOLERANCES:
      - 1/4" SPACING DISTANCE, NOT TO EXCEED 1"
   3. PLACEMENT OF EMBEDDED ITEMS SHALL BE WITHIN THE FOLLOWING TOLERANCES:
      - VERTICAL ALIGNMENT — Ñ1"
      - LATERAL ALIGNMENT — Ñ1"
      - LEVEL ALIGNMENT — Ñ1"
   4. PLACEMENT OF FOOTINGS SHALL BE WITHIN THE FOLLOWING TOLERANCES:
      - LATERAL ALIGNMENT — Ñ2"
      - LEVEL ALIGNMENT — +1/2" TO -2"
      - (LEVEL ALIGNMENT SUPPORTING MASONRY) — Ñ1/2"
   5. CROSS-SECTIONAL DIMENSION OF FOUNDATIONS SHALL BE WITHIN THE FOLLOWING TOLERANCES:
      - SPREAD FOOTINGS / PILE CAPS — +2" TO -1/2"
      - FOUNDATION THICKNESS — Ñ5%
   6. TOP OF FOOTING / PILE CAP SLOPE
      - 1" IN 10'-0"

F. MILD STEEL PROTECTION
   1. FOOTINGS / PILE CAPS - BOTTOM & SIDES — 3"
   2. FOOTINGS - TOP — 2"
   3. PERIMETER WALLS - #5 & SMALLER — 1 1/2"
   4. PERIMETER WALLS - #6 & LARGER — 2"
   5. INTERIOR WALLS — 3/4"
   6. BEAMS, PIERS, & COLUMNS — 1 1/2"
   7. SLABS - BOTTOM & SIDES — 1"
   8. SLABS - TOP — 3/4"

G. CLASS 'B' TENSION LAP SPLICE LENGTHS

DORSCHNER ASSOCIATES
Architecture
Planning

Dorschner|Associates, Inc.
849 E. Washington Ave., Ste. 112
Madison, Wisconsin 53703

ISSUED

02.16.15 CONSTRUCTION DOCUMENTS

FOR PRELIMINARY USE ONLY
NOT FOR CONSTRUCTION

PIERCE ENGINEERS INC
CONSULTING STRUCTURAL ENGINEERS
10 West Mifflin St, Suite 205 | Madison, WI 53703
Phone: 608.256.7304 | Fax: 608.256.7306
PE PROJECT 14629

PROJECT
MONONA SCHLUTER PARK RESTROOMS
4500 WINNEQUAH ROAD
MONONA, WI 53716

PROJECT NO.
14013-00

DRAWING
STRUCTURAL NOTES

DATE
02.16.15

CLASS 'B' TENSION LAP SPLICE LENGTHS (INCHES)

BAR SIZE	f'c = 3000		f'c = 4000	
	BOT	TOP	BOT	TOP
#3	22	28	19	24
#4	29	37	25	33
#5	36	47	31	41
#6	43	56	37	49
#7	63	81	54	71
#8	72	93	62	81
#9	81	105	70	91
#10	91	118	79	102
#11	101	131	87	113

NOTES (d_b = BAR DIAMETER, C-C = CENTER TO CENTER):
1. SCHEDULE BASED ON CLEAR COVER > 1 d_b AND C-C > 2 d_b
2. TOP BARS OF BEAMS AND JOIST AND HORIZONTAL WALL REINFORCING
3. THIS SCHEDULE IS PROVIDED FOR THE CONVENIENCE OF THE CONTRACTOR AND IS NOT INTENDED TO COVER ALL SITUATIONS. SHOP DRAWINGS SHALL CLEARLY INDICATE ALL REQUIRED LAP LENGTHS.

H. CONCRETE PLACEMENT
1. BEFORE PLACING CONCRETE, VERIFY THAT INSTALLATION OF FORMWORK, REINFORCEMENT, AND EMBEDDED ITEMS IS COMPLETE AND THAT REQUIRED INSPECTIONS HAVE BEEN PERFORMED.
2. DEPOSIT CONCRETE CONTINUOUSLY IN ONE LAYER OR IN HORIZONTAL LAYERS OF SUCH THICKNESS THAT NO NEW CONCRETE WILL BE PLACED ON CONCRETE THAT HAD HARDENED ENOUGH TO CAUSE SEAMS OR PLANES OF WEAKNESS, IF A SECTION CANNOT BE PLACED CONTINUOUSLY, PROVIDE CONSTRUCTION JOINTS AS INDICATED. DEPOSIT CONCRETE TO AVOID SEGREGATION.
   a. CONSOLIDATE PLACED CONCRETE WITH MECHANICAL VIBRATING EQUIPMENT ACCORDING TO ACI 301.

I. FINISHING FORMED SURFACES
1. ROUGH-FORMED FINISH: AS-CAST CONCRETE TEXTURE IMPARTED BY FORM-FACIGN MATERIAL WITH TIE HOLES AND DEFECTS REPAIRED AND PATCHED. REMOVE FINS AND OTHER PROJECTIONS THAT EXCEED SPECIFIED LIMITS ON FORMED-SURFACE IRREGULARITIES.
   a. APPLY TO CONCRETE SURFACES NOT EXPOSED TO PUBLIC VIEW
2. SMOOTH-FORMED FINISH: AS-CAST CONCRETE TEXTURE IMPARTED BY FORM-FACING MATERIAL, ARRANGED IN AN ORDERLY AND SYMMETRICAL MANNER WITH A MINIMUM OF SEAMS. REPAIR AND PATCH TIE HOLES AND DEFECTS. REMOVE FINS AND OTHER PROJECTIONS THAT EXCEED SPECIFIED LIMITS ON FORMED-SURFACE IRREGULARITIES.
   a. APPLY TO CONCRETE SURFACES EXPOSED TO PUBLIC VIEW.
3. RUBBED FINISH: APPLY THE FOLLOWING TO SMOOTH-FORMED FINISH AS-CAST CONCRETE WHERE INDICATED.
   a. SMOOTH-RUBBED FINISH(AT EXPOSED TO EXTERIOR VIEW): NOT LATER THAN ONE DAY AFTER FORM REMOVAL, MOISTEN CONCRETE SURFACES AND RUB WITH CARBORUNDUM BRICK OR ANOTHER ABRASIVE UNTIL PRODUCING A UNIFORM COLOR AND TEXTURE. DO NOT APPLY CEMENT GROUT OTHER THAN THAT CREATED BY THE RUBBING PROCESS.
4. RELATED UNFORMED SURFACES: AT TOPS OF WALLS, HORIZONTAL OFFSETS, AND SIMILAR UNFORMED SURFACES ADJACENT TO FORMED SURFACES, STRIKE OFF SMOOTH AND FINISH WITH A TEXTURE MATCHING ADJACENT FORMED SURFACES. CONTINUE FINAL SURFACE TREATMENT OF FORMED SURFACE UNIFORMLY ACROSS ADJACENT UNFORMED SURFACES, UNLESS OTHERWISE INDICATED.

J. FINISHING FLOORS AND SLABS
1. GENERAL: COMPLY WITH ACI 302.1 R RECOMMENDATIONS FOR SCREEDING, RESTRAIGHTENING, AND FINISHING OPERATIONS FOR CONCRETE SURFACES. DO NOT WET CONCRETE SURFACES.
2. SCRATCH FINISH: WHILE STILL PLASTIC, TEXTURE CONCRETE SURFACE THAT HAS BEEN SCREEDED AND BULL-FLOATED OR DARBIED. USE STIFF BRUSHES, BROOMS, OR RAKES TO PRODUCE A PROFILE AMPLITUDE OF ¼ INCH IN 1 DIRECTION.
   a. APPLY SCRATCH FINISH TO SURFACES INDICATED AND TO RECEIVE CONCRETE FLOOR TOPPINGS TO RECEIVE MORTAR SETTING BEDS FOR BONDED CEMENTITIOUS FLOOR FINISHES.
3. FLOAT FINISH: CONSOLIDATE SURFACE WITH POWER-DRIVEN FLOATS OR BY HAND FLOATING IF AREA IS SMALL OR INACCESSIBLE TO POWER DRIVE FLOATS. RESTRAIGHTEN, CUT DOWN HIGH SPOTS, AND FILL LOW SPOTS. REPEAT FLOAT PASSES AND RESTRAIGHTENING UNTIL SURFACE IS LEFT WITH A UNIFORM, SMOOTH, GRANULAR TEXTURE.
   a. APPLY FLOAT FINISH TO SURFACES TO RECEIVE TROWEL FINISH AND TO BE COVERED WIT HFLUID-APPLIED OR SHEET WATERPROOFING, BUILT-UP OR MEMBRANE ROOFING, OR SAN-BED TERRAZZO.
4. TROWEL FINISH: AFTER APPLYING FLOAT FINISH, APPLY FIRST TROWELING AND CONSOLIDATE CONCRETE BY HAND OR POWER-DRIVEN TROWEL. CONTINUE TROWELING PASSES AND RESTRAIGHTEN UNTIL SURFACE IS FREE OF TROWEL MARKS AND UNIFORM TEXTURE AND APPEARANCE. GRIND SMOOTH ANY SURFACE DEFECTS THAT WOULD TELEGRAPH THROUGH APPLIED COATING OR FLOOR COVERINGS.
   a. APPLY A TROWEL FINISH TO SURFACES EXPOSED TO VIEW OR TO BE COVERED WITH RESILIENT FLOORING, CARPET, CERAMIC, OR QUARRY TILE SET OVER A CLEAVAGE MEMBRANE, PAINT, OR ANOTHER THIN-FILM-FINISH COATING SYSTEM.
   b. FINISH AND MEASURE SURFACE SO GAP AT ANY POINT BETWEEN CONCRETE SURFACE AND AN UNLEVELED, FREESTANDING,10-FOOT- LONG STRAIGHTEDGE RESTING ON 2 HIGH SPOTS AND PLACED ANYWHERE ON SURFACE DOES NOT EXCEED ¼ INCH.
5. TROWEL AND FINE-BROOM FINISH: APPLY A FIRST TROWEL FINISH TO SURFACES WHERE CERAMIC OR QUARRY TILE IS TO BE INSTALLED BY EITHER OR THIN-SET METHOD. WHILE CONCRETE IS STILL PLASTIC, SLIGHTLY SCARIFY SURFACE WITH A FINE BROOM.
   a. COMPLY WITH FLATNESS AND LEVELNESS TOLERANCES FOR TROWEL FINISHED FLOOR SURFACES.
6. BROOM FINISH: APPLY A BROOM FINISH TO EXTERIOR CONCRETE PLATFORMS, STEPS, AND RAMPS, AND ELSEWHERE INDICATED.

K. CONCRETE PROTECTING AND CURING
1. GENERAL: PROTECT FRESHLY PLACED CONCRETE FROM PREMATURE DRYING AND EXCESSIVE COLD OR HOT TEMPERATURES. COMPLY WITH ACI 306.1 FOR COLD-WEATHER PROTECTION AND ACI 301 FOR HOT-WEATHER PROTECTION DURING CURING.
2. EVAPORATING RETARDER: APPLY EVAPORATION RETARDER TO UNFORMED CONCRETE SURFACES IF HOT, DRY, OR WINDY CONDITIONS CAUSE MOISTURE LOSS APPROACHING 0.2 lb/sq. ft. x h BEFORE AND DURING FINISHING OPERATIONS. APPLY ACCORDING TO MANUFACTURER'S WRITTEN INSTRUCTIONS AFTER PLACING, SCREEDING, AND BULL FLOATING OR DARBYING CONCRETE, BUT BEFORE FLOAT FINISHING.
3. CURE CONCRETE ACCORDING TO ACI 308.1, BY ONE OR A COMBINATION OF THE FOLLOWING METHODS:
   a. MOISTURE CURING: KEEP SURFACES CONTINUOUSLY MOIST FOR NOT LESS THAN SEVEN DAYS.
   b. MOISURE-RETAINING-COVER CURING: COVER CONCRETE SURFACES WITH MOISTURE-RETAINING COVER FOR CURING CONCRETE, PACED IN WIDEST PRACTICABLE WIDTH, WITH SIDES AND ENDS LAPPED AT LEAST 12 INCHES, AND SEALED BY WATERPROOF TAPE OR ADHESIVE. CURE FOR NOT LESS THAN SEVEN DAYS. IMMEDIATELY REPAIR ANY HOLES OR TEARS DURING CURING PERIOD USING COVER MATERIAL AND WATERPROOF TAPE.

DORSCHNER ASSOCIATES
Architecture
Planning
Dorschner|Associates, Inc.
849 E. Washington Ave., Ste. 112
Madison, Wisconsin 53703

ISSUED
02.16.15 CONSTRUCTION DOCUMENTS

FOR PRELIMINARY USE ONLY
NOT FOR CONSTRUCTION

PIERCE ENGINEERS INC
CONSULTING STRUCTURAL ENGINEERS
10 West Mifflin St, Suite 205 | Madison, WI 53703
Phone: 608.256.7304 | Fax: 608.256.7306
PE PROJECT 14629

PROJECT
MONONA SCHLUTER PARK RESTROOMS
4500 WINNEQUAH ROAD
MONONA, WI 53716

PROJECT NO.
14013-00

DRAWING
STRUCTURAL NOTES

DATE
02.16.15

SECTION 03300 - CAST-IN-PLACE CONCRETE (cont.)

c. CURING COMPOUND: APPLY UNIFORMLY IN CONTINUOUS OPERATION BY POWER SPRAY OR ROLLER ACCORDING TO MANUFACTURER'S WRITTEN INSTRUCTIONS. RECOAT AREAS SUBJECTED TO HEAVY RAINFALL WITHIN THREE HOURS AFTER INITIAL APPLICATION. MAINTAIN CONTINUITY OF COATING AND REPAIR DAMAGE DURING CURING PERIOD.

d. CURING AND SEALING COMPOUND: APPLY UNIFORMLY TO FLOORS AND SLABS INDICATED IN A CONTINUOUS OPERATION BY POWER SPRAY OR ROLLER ACCORDING TO MANUFACTURER'S WRITTEN INSTRUCTIONS. VERIFY COMPOUND IS COMPATIBLE WITH FLOOR FINISHES.

N. MISCELLANEOUS CAST-IN-PLACE CONCRETE NOTES

1. CONTRACTOR SHALL NOTIFY THE ARCHITECT / ENGINEER AT LEAST 48 HOURS PRIOR TO PLACING CONCRETE TO FACILITATE ON SITE OBSERVATION OF REBAR.
2. WHEN THE AVERAGE TEMPERATURE FROM MIDNIGHT TO MIDNIGHT IS EXPECTED TO DROP BELOW 40ÁF FOR THREE SUCCESSIVE DAYS, COLD WEATHER CONCRETING REQUIREMENTS MUST BE FOLLOWED.
3. WHEN AMBIENT AIR OR CONCRETE TEMPERATURES EXCEED 90ÁF, STEEL REINFORCING, AND/OR FORMING SURFACES ARE ABOVE 120ÁF, OR WHEN WIND VELOCITY, HUMIDITY, OR SOLAR RADIATION CREATE CONDITIONS OF ACCELERATED MOISTURE LOSS AND INCREASED RATE OF HYDRATION, HOT WEATHER CONCRETING REQUIREMENTS SHALL BE FOLLOWED.
4. ALL HOOKS IN STEEL REINFORCING SHALL BE ACI STANDARD HOOKS, UNLESS NOTED OTHERWISE IN CONSTRUCTION DOCUMENTS.
5. ALL CONCRETE SURFACES SHALL BE FORMED, UNLESS NOTED OTHERWISE.
6. CONTROL JOINTS SHALL BE PLACED IN SLAB ON GRADE AND SLAB ON METAL DECK CONSTRUCTION WITHIN 24 HOURS OF INITIAL POUR.
7. STEEL REINFORCING SPLICES OF ADJACENT BARS SHALL BE STAGGERED SUCH THAT SPLICES ARE 4 FEET APART, MINIMUM.
8. UNLESS NOTED OTHERWISE ON DRAWING, PROVIDE (2) #5 BARS AROUND ALL OPENINGS AND (2) #5 DIAGONALLY AT ALL OPENING CORNERS. EXTEND 2'-6" PAST OPENING TYPICALLY.
9. WELDED WIRE REINFORCING SHALL BE IN FLAT SHEETS ONLY, AND LAPPED A MINIMUM OF 6 INCHES.
10. WELDING OF STEEL REINFORCING IS NOT PERMITTED.
11. SLEEVES, CONDUITS, OR PIPES THROUGH SLABS AND WALLS SHALL BE PLACED AT THREE DIAMETERS ON CENTER, OR 4 INCHES MINIMUM.
12. ALUMINUM CONDUIT OR PIPING SHALL NOT BE CAST IN CONCRETE.
13. PROVIDE A 3/4" CHAMFER ON EXPOSED CORNERS OF CONCRETE, UNLESS NOTED OTHERWISE. TOP EDGES OF WALLS SHALL BE TOOLED, UNLESS NOTED OTHERWISE.

O. CONCRETE SURFACE REPAIRS

1. DEFECTIVE CONCRETE: REPAIR AND PATCH DEFECTIVE AREAS WHEN APPROVED BY ARCHITECT. REMOVE AND REPLACE CONCRETE THAT CANNOT BE REPAIRED AND PATCH TO ARCHITECT'S APPROVAL.

P. FIELD QUALITY CONTROL

1. TESTING AND INSPECTING: OWNER WILL ENGAGE A QUALIFIED TESTING AND INSPECTING AGENCY TO PERFORM FIELD TESTS AND INSPECTIONS AND PREPARE TEST REPORTS.
2. TESTING AND INSPECTING: ENGAGE A QUALIFIED TESTING AND INSPECTING AGENCY TO PERFORM TESTS AND INSPECTIONS AND TO SUBMIT REPORTS.
3. INSPECTIONS:
   a. STEEL REINFORCEMENT PLACEMENT.
   b. STEEL REINFORCEMENT WELDING.
   c. HEADED BOLTS AND EMBED PLATES.
   d. VERIFICATION OF CONCRETE STRENGTH BEFORE REMOVAL OF SHORES AND FORMS FROM BEAMS AND SLABS.
4. CONCRETE TESTS: TESTING OF COMPOSITE SAMPLES OF FRESH CONCRETE OBTAINED ACCORDING TO ASTM C 172 SHALL BE PERFORMED ACCORDING TO THE FOLLOWING REQUIREMENTS:
   a. TESTING FREQUENCY: OBTAIN AT LEAST ONE COMPOSITE SAMPLE FOR EACH 100 cu. yd. OR FRACTION THEREOF OF EACH CONCRETE MIXTURE PLACED EACH DAY.
      - WHEN FREQUENCY OF TESTING WILL PROVIDE FEWER THAN FIVE COMPRESSIVE-STRENGTH TESTS FOR EACH CONCRETE MIXTURE, TESTING SHALL BE CONDUCTED FROM AT LEAST FIVE RANDOMLY SELECTED BATCHES OR FROM EACH BATCH IF FEWER THAN FIVE ARE USED.
   b. SLUMP: ASTM C 143/C 143M; ONE TEST AT POINT OF PLACEMENT FOR EACH COMPOSITE SAMPLE, BUT NOT LESS THAN ONE TEST FOR EACH DAY'S POUR OF EACH CONCRETE MIXTURE. PERFORM ADDITIONAL TESTS WHEN CONCRETE CONSISTENCY APPEARS TO CHANGE.
   c. AIR CONTENT: ASTM C 231, PRESSURE METHOD, FOR NORMAL-WEIGHT CONCRETE;ONE TEST FOR EACH COMPOSITE SAMPLE, BUT NOT LESS THAN ONE TEST FOR EACH DAY'S POUR OF EACH CONCRETE MIXTURE.
   d. CONCRETE TEMPERATURE: ASTM C 1064/C 1064M; ONE TEST HOURLY WHEN AIR TEMPERATURE IS 40 DEG F AND BELOW AND WHEN 80 DEG AND ABOVE, AND ONE TEST FOR EACH COMPOSITE SAMPLE.
   e. COMPRESSION TEST SPECIMENS: ASTM C 31/C 31M.
      - CAST AND LABORATORY CURE TWO SETS OF TWO STANDARD CYLINDER SPECIMENS FOR EACH COMPOSITE SAMPLE.
      - CAST AND FIELD CURE ONE SET OF TWO STANDARD CYLINDER SPECIMENS FOR EACH COMPOSITE SAMPLE DURING COLD WEATHER CONCRETING.
   f. COMPRESSIVE-STRENGTH TESTS: ASTM C 39/C 39M; TEST ONE SET OF TWO LABORATORY-CURED SPECIMENS AT 7 DAYS AND ONE SET OF TWO SPECIMENS AT 28 DAYS.
      - TEST ONE SET OF TWO FIELD-CURED SPECIMENS AT 7 DAYS AND ONE SET OF TWO SPECIMENS AT 28 DAYS.
      - A COMPRESSIVE-STRENGTH TEST SHALL BE THE AVERAGE COMPRESSIVE STRENGTH FROM A SET OF TWO SPECIMENS OBTAINED FROM SAME COMPOSITE SAMPLE AND TESTED AT AGE INDICATED.
   g. WHEN STRENGTH OF FIELD-CURED CYLINDERS IS LESS THAN 85 PERCENT OF COMPANION LABORATORY-CURED CYLINDERS, CONTRACTOR SHALL EVALUATE OPERATIONS AND PROVIDE CORRECTIVE PROCEDURES FOR PROTECTING AND CURING IN-PLACE CONCRETE.
   h. STRENGTH OF EACH CONCRETE MIXTURE WILL BE SATISFACTORY IF EVERY AVERAGE OF ANY THREE CONSECUTIVE COMPRESSIVE-STRENGTH TESTS EQUALS OR EXCEEDS SPECIFIED COMPRESSIVE STRENGTH AND NO COMPRESIVE-STRENGTH TEST VALUE FALLS BELOW SPECIFIED COMPRESSIVE STRENGTH BY MORE THAN 500 psi.
   i. TEST RESULTS SHALL BE REPORTED IN WRITING TO ARCHITECT, CONCRETE MANUFACTURER, AND CONTRACTOR WITHIN 48 HOURS OF TESTING. REPORTS OF COMPRESSIVE-STRENGTH TESTS SHALL CONTAIN PROJECT IDENTIFICATION NAME AND NUMBER, DATE OF CONCRETE PLACEMENT, NAME OF CONCRETE TESTING AND INSPECTING AGENCY, LOCATION OF CONCRETE BATCH IN WORK, DESIGN COMPRESSIVE STRENGTH AT 28 DAYS, CONCRETE MIXTURE PROPORTIONS AND MATERIALS, COMPRESSIVE BREAKING STRENGTH, AND TYPE OF BREAK FOR BOTH 7- AND 28-DAY TESTS.
   j. NONDESTRUCTIVE TESTING: IMPACT HAMMER, SONOSCOPE, OR OTHER NONDESTRUCTIVE DEVICE MAY BE PERMITTED BY ARCHITECT BUT WILL NOT BE USED AS SOLE BASIS FOR APPROVAL OR REJECTION OF CONCRETE.
   k. ADDITIONAL TESTS: TESTING AND INSPECTING AGENCY SHALL MAKE ADDITIONAL TESTS OF CONCRETE WHEN TEST RESULTS INDICATE THAT SLUMP, AIR ENTRAINMENT, COMPRESSIVE STRENGTHS, OR OTHER REQUIREMENTS HAVE NOT BEEN MET, AS DIRECTED BY ARCHITECT. TESTING AND INSPECTING AGENCY MAY CONDUCT TESTS TO DETERMINE ADEQUACY OF CONCRETE BY CORED CYLINDERS COMPLYING WITH ASTM C 42/C 42M OR BY OTHER METHODS AS DIRECTED BY ARCHITECT.
   l. ADDITIONAL TESTING AND INSPECTING, AT CONTRACTOR'S EXPENSE, WILL BE PERFORMED TO DETERMINE COMPLIANCE OF REPLACED OR ADDITIONAL WORK WITH SPECIFIED REQUIREMENTS.
   m. CORRECT DEFICIENCIES IN THE WORK THAT TEST REPORTS AND INSPECTIONS INDICATE DOES NOT COMPLY WITH THE CONTRACT DOCUMENTS.

END OF SECTION 03300

DORSCHNER ASSOCIATES
Architecture
Planning

Dorschner|Associates, Inc.
849 E. Washington Ave., Ste. 112
Madison, Wisconsin 53703

ISSUED

02.16.15 CONSTRUCTION DOCUMENTS

FOR PRELIMINARY USE ONLY
NOT FOR CONSTRUCTION

PIERCE ENGINEERS INC
CONSULTING STRUCTURAL ENGINEERS
10 West Mifflin St, Suite 205 | Madison, WI 53703
Phone: 608.256.7304 | Fax: 608.256.7306
PE PROJECT 14629

PROJECT
MONONA SCHLUTER PARK RESTROOMS
4500 WINNEQUAH ROAD
MONONA, WI 53716

PROJECT NO.
14013-00

DRAWING
STRUCTURAL NOTES

DATE
02.16.15

S005

CMU WALL CONSTRUCTION NOTES

1. IN ACCORDANCE WITH "ACI 530-05/ASCE 6-05/TMS 402-05 BUILDING CODE FOR MASONRY STRUCTURES" PROVIDE LEVEL B QUALITY ASSURANCE PER TABLE 1.15.2 AND AS REQUIRED IN CHAPTER 1. VERIFY f'm REQUIRED USING THE UNIT STRENGTH METHOD.
2. CMU SHALL BE LAID IN RUNNING BOND WITH TYPE S MORTAR (TYPE M BELOW GRADE).
3. PROVIDE MINIMUM 1- #5 VERTICAL BAR AT ALL WALL CORNERS, ENDS OF WALLS, & EACH SIDE OF CONTROL JOINTS.
4. ALL REINFORCED CELLS SHALL BE GROUTED WITH PEA GRAVEL CONCRETE HAVING A MIN. COMPRESSIVE STRENGTH OF 3,000psi.
5. HORIZONTAL REINFORCING AND BOND BEAM REINFORCING AT CORNERS SHALL BE LAPPED A MINIMUM OF 48 BAR DIAMETERS, OR 24" INCHES, WHICHEVER IS LARGER.
6. CLEANOUTS SHALL BE PROVIDED IN THE BOTTOM COURSE OF MASONRY FOR EACH GROUT POUR, WHEN THE POUR HEIGHT EXCEEDS 5 FEET.
7. FACE SHELLS AND WEB FORMING CELLS SHALL BE FULL-BEDDED IN THE STARTING COURSE ON FOUNDATIONS, AND IN ALL COURSES OF PIERS AND PILASTERS.
8. PROVIDE HORIZONTAL JOINT REINFORCING AT 16" O.C. VERTICALLY (8" O.C. IN PARAPET WALLS) U.N.O.
9. HORIZONTAL JOINT REINFORCING SHALL BE TERMINATED AT CONTROL JOINTS. BOND BEAM REINFORCING SHALL BE CONTINUOUS.
10. REFER TO ARCHITECTURAL DRAWINGS FOR CONTROL JOINT SPACINGS, COURSING AND MORTAR JOINT DETAILING.
11. SOLID OR SOLID GROUTED CMU SHALL BE PROVIDED IN COURSES IMMEDIATELY ABOVE AND BELOW ANY CHANGES IN WYTHE THICKNESS.

DORSCHNER ASSOCIATES

Architecture
Planning

Dorschner|Associates, Inc.
849 E. Washington Ave., Ste. 112
Madison, Wisconsin 53703

ISSUED

02.16.15 CONSTRUCTION DOCUMENTS

FOR PRELIMINARY USE ONLY
NOT FOR CONSTRUCTION

PIERCE ENGINEERS INC
CONSULTING STRUCTURAL ENGINEERS
10 West Mifflin St, Suite 205 | Madison, WI 53703
Phone: 608.256.7304 | Fax: 608.256.7306
PE PROJECT 14629

PROJECT
MONONA SCHLUTER PARK
RESTROOMS
4500 WINNEQUAH ROAD
MONONA, WI 53716

PROJECT NO.
14013-00

DRAWING
STRUCTURAL NOTES

DATE
02.16.15

S006

FOOTING SCHEDULE

MARK	DIMENSIONS			REINFORCEMENT	REMARKS
	WIDTH	LENGTH	DEPTH		
F1	3'-0"	5'-0"	1'-0"	#4 @ 12"OC EW	
W1	1'-4"	CONT.	1'-0"	2 - #5 x CONT.	
W2	3'-0"	CONT.	1'-0"	3 - #5 x CONT.	

FOOTING SCHEDULE NOTES:

1. LW = LONG WAY SW = SHORT WAY EW = EACH WAY
   T = TOP B = BOTTOM CONT. = CONTINUOUS

MASONRY WALL & PIER SCHEUDLE

MARK	WALL / PIER SIZE	GROUT SPACING	REINFORCING
1	8" CMU WALL	CELLS @ 48"OC	#5 @ 48"OC
P1	8" x 16" PIER	SOLID	1 - #5 BAR EACH CELL
P2	16" x 16" PIER	SOLID	1 - #5 BAR EACH CELL
P3	16" x 24" PIER	SOLID	1 - #5 BAR EACH CELL

MASONRY WALL & PIER SCHEDULES NOTES:

1. SEE PLAN FOR WALL DESIGNATIONS.
2. ALL WALLS SHALL HAVE JOINT REINFORCEMENT.
3. PROVIDE MATCHING VERTICAL REINFORCING BARS INTO CONCRETE FOUNDATION WALLS FOR ALL REINFORCED CMU WALLS.
4. PROVIDE MATCHING DOWELS w/ STANDARD 90Á HOOKS INTO FOUNDATIONS FOR ALL REINFORCED WALLS AT PIERS.
5. LAP VERTICAL BARS 48 BAR DIAMETERS AT EACH FLOOR LEVEL.
6. WHERE WALLS ARE NOT REINFORCED, PROVIDE #5 DOWELS @ 48"OC FROM FOUNDATION EXTENDING 0'-8" MINIMUM INTO WALLS.

LINTEL SCHEDULE

MARK	SIZE	CONFIGURATION
L1	8"x8" CMU BOND BEAM w/ 2 - #5 x CONT.	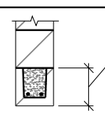 GROUT SOLID OVER OPENING WIDTH PLUS 8" EACH END
L2	8"x16" CMU BOND BEAM w/ 2 - #5 x CONT.	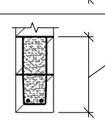 GROUT SOLID OVER OPENING WIDTH PLUS 8" EACH END

LINTEL SCHEDULE NOTES:

1. PROVIDE 8" MINIMUM BEARING FOR ALL LINTELS, U.N.O.
2. PROVIDE MINIMUM OF 3 COURSES SOLID GROUTED CMU BELOW LINTEL BEARING (UNLESS OTHERWISE NOTED). SEE MASONRY WALL SCHEDULE.
3. PROVIDE ADJUSTABLE MASONRY ANCHORS ON WEBS/FLANGES AT 32" O.C., AND ON UNDERSIDE OF BOTTOM ℄ FOR LINTELS IN FUTURE OPENINGS.
4. PROVIDE HORIZONTAL REINFORCING IN THE JOINT ABOVE THE LINTEL, AND EXTEND 24" BEYOND EDGE OF OPENING.
5. REFER TO ARCHITECTURAL DRAWINGS FOR OPENING LOCATIONS, ELEVATIONS, & SIZES.
6. SHORE ALL CMU LINTELS UNTIL GROUT HAS CURED.

FOUNDATION LEGEND

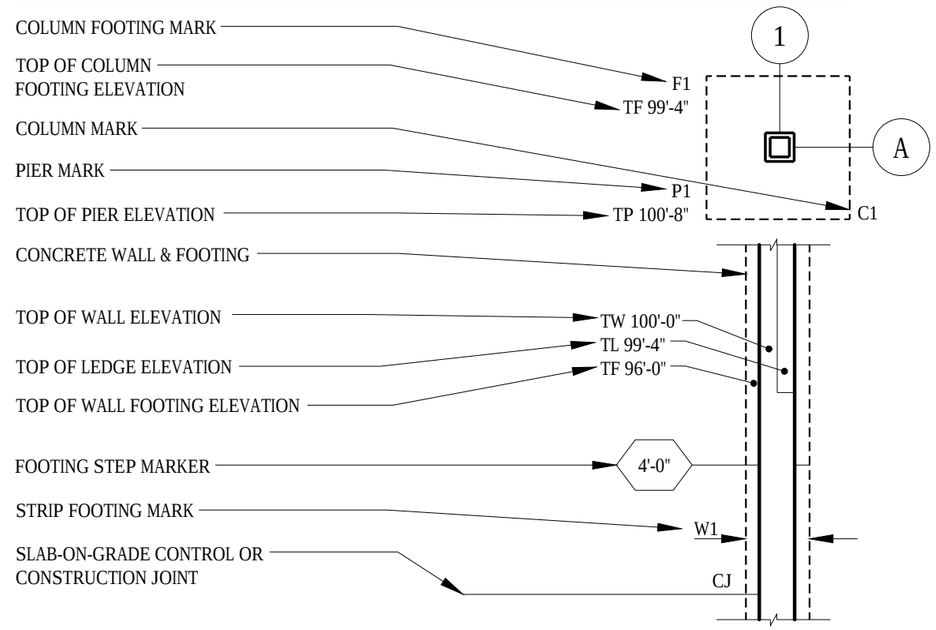

DORSCHNER ASSOCIATES
Architecture
Planning

Dorschner|Associates, Inc.
849 E. Washington Ave., Ste. 112
Madison, Wisconsin 53703

ISSUED

02.16.15 CONSTRUCTION DOCUMENTS

FOR PRELIMINARY USE ONLY
NOT FOR CONSTRUCTION

PIERCE ENGINEERS INC
CONSULTING STRUCTURAL ENGINEERS
10 West Mifflin St, Suite 205 | Madison, WI 53703
Phone: 608.256.7304 | Fax: 608.256.7306
PE PROJECT 14629

PROJECT
MONONA SCHLUTER PARK RESTROOMS
4500 WINNEQUAH ROAD
MONONA, WI 53716

PROJECT NO.
14013-00

DRAWING
STRUCTURAL LEGENDS AND SCHEDULES

DATE
02.16.15

S010

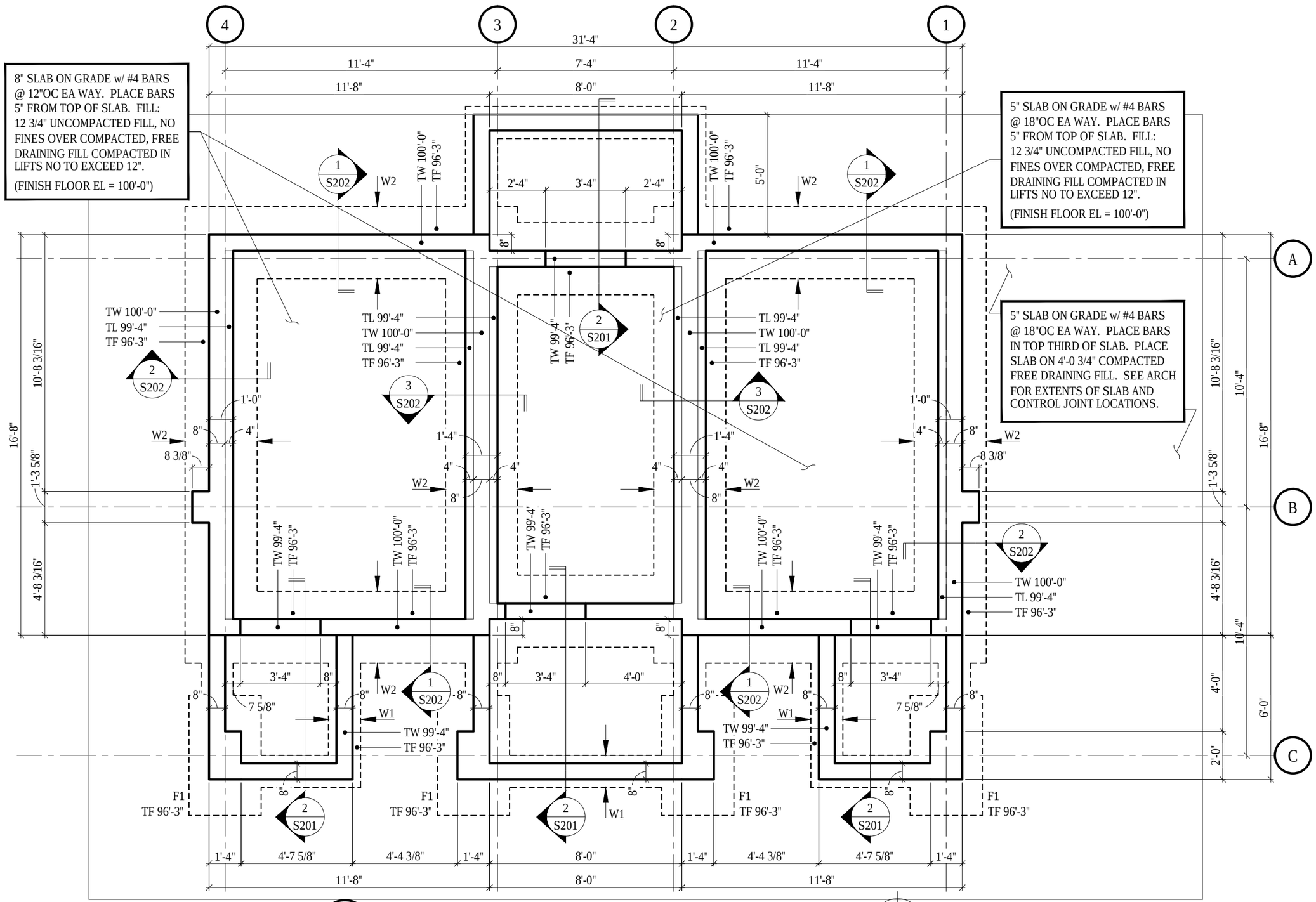

1 S100 FOUNDATION PLAN

SCALE : 1/4" = 1'-0"

NOTES:

1. SEE SHEETS S000 - S009 FOR ALL STRUCTURAL NOTES & SPECIFICATIONS.
2. SEE SHEET S010 FOR ALL STRUCTURAL LEGENDS AND SCHEDULES.

DORSCHNER ASSOCIATES
Architecture
Planning
Dorschner|Associates, Inc.
849 E. Washington Ave., Ste. 112
Madison, Wisconsin 53703

ISSUED

02.16.15 CONSTRUCTION DOCUMENTS

FOR PRELIMINARY USE ONLY
NOT FOR CONSTRUCTION

PIERCE ENGINEERS INC
CONSULTING STRUCTURAL ENGINEERS
10 West Mifflin St, Suite 205 | Madison, WI 53703
Phone: 608.256.7304 | Fax: 608.256.7306
PE PROJECT 14629

PROJECT
MONONA SCHLUTER PARK RESTROOMS
4500 WINNEQUAH ROAD
MONONA, WI 53716

PROJECT NO.
14013-00

DRAWING
FOUNDATION PLAN

DATE
02.16.15

S100

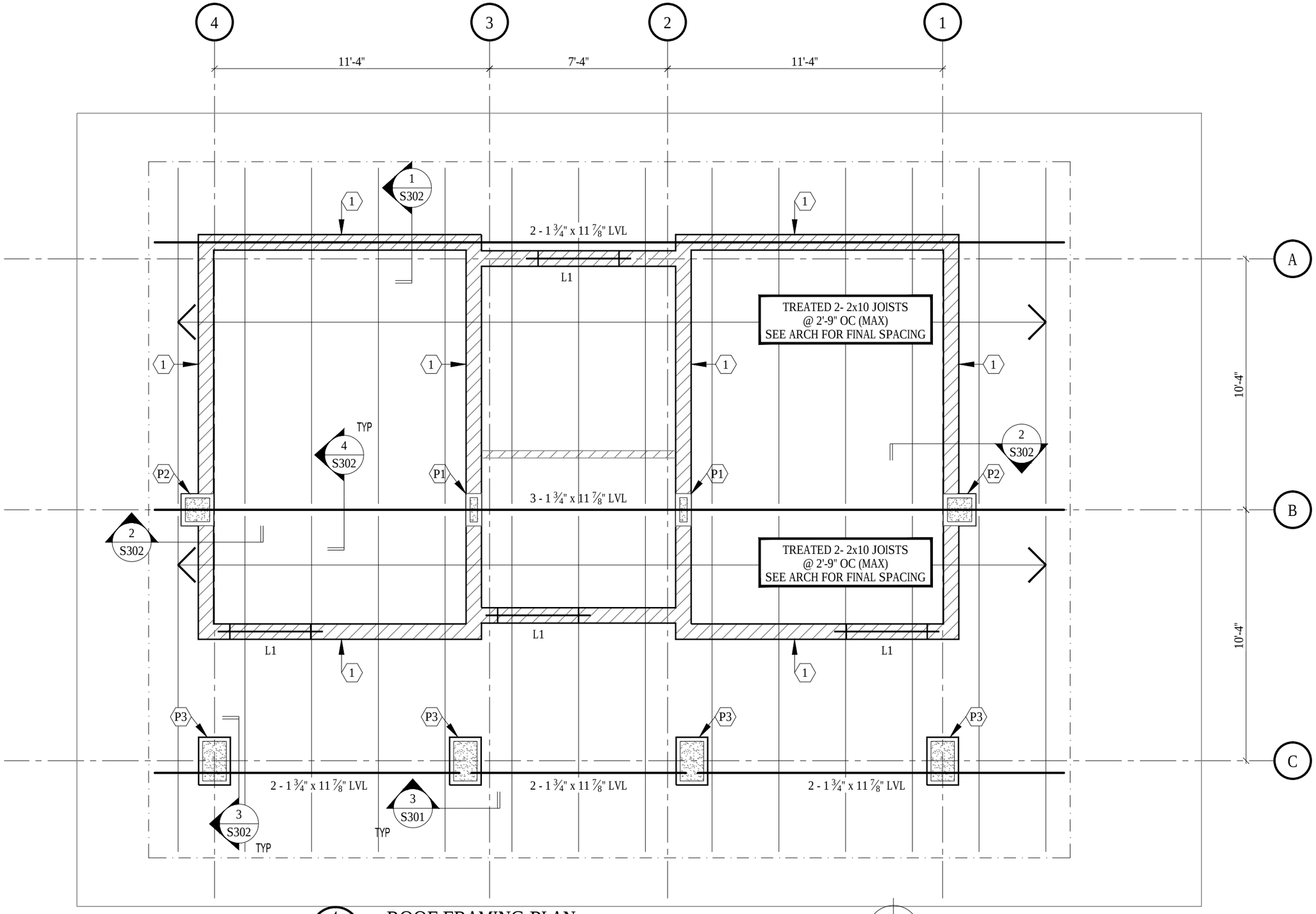

1 S101

ROOF FRAMING PLAN

SCALE : 1/4" = 1'-0"

NOTES:

1. SEE SHEETS S000 - S009 FOR ALL STRUCTURAL NOTES & SPECIFICATIONS.
2. SEE SHEET S010 FOR ALL STRUCTURAL LEGENDS AND SCHEDULES.

DORSCHNER ASSOCIATES
Architecture
Planning

Dorschner|Associates, Inc.
849 E. Washington Ave., Ste. 112
Madison, Wisconsin 53703

ISSUED

02.16.15 CONSTRUCTION DOCUMENTS

FOR PRELIMINARY USE ONLY
NOT FOR CONSTRUCTION

PIERCE ENGINEERS INC
CONSULTING STRUCTURAL ENGINEERS
10 West Mifflin St, Suite 205 | Madison, WI 53703
Phone: 608.256.7304 | Fax: 608.256.7306
PE PROJECT 14629

PROJECT
MONONA SCHLUTER PARK RESTROOMS
4500 WINNEQUAH ROAD
MONONA, WI 53716

PROJECT NO.
14013-00

DRAWING
ROOF FRAMING PLAN

DATE
02.16.15

S101

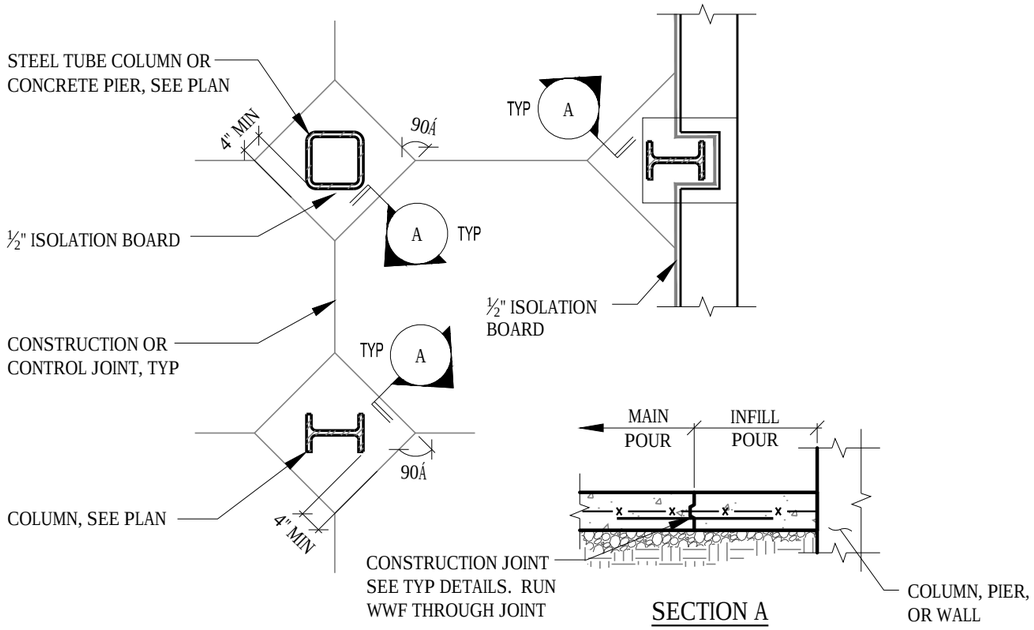

TYPICAL SLAB ON GRADE ISOLATION JOINTS @ COLUMN

4 / S200

SCALE : NTS

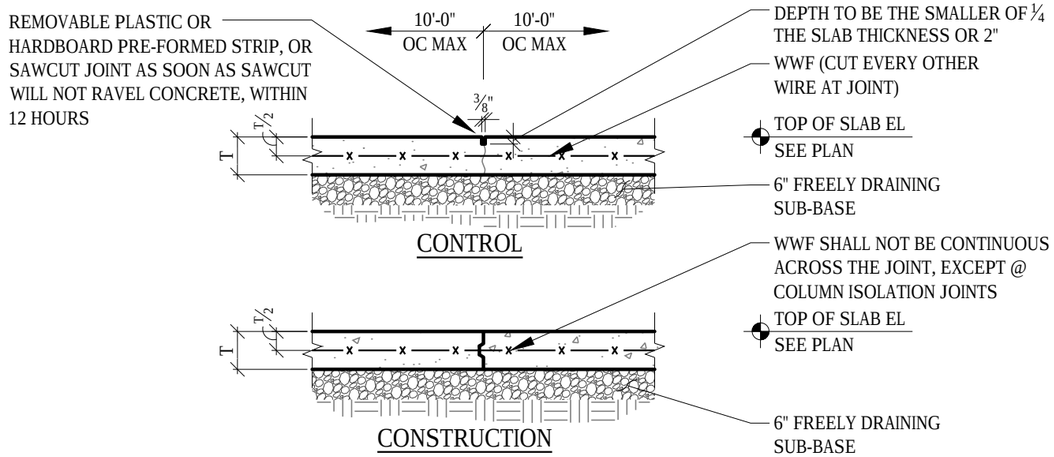

NOTES:

1. SEE THE FOUNDATION PLAN FOR SLAB THICKNESS, REINFORCEMENT, AND JOINT LOCATIONS.
2. SLAB SHALL BE PLACED USING "STRIP" OR "LANE" CONSTRUCTION.
3. FILL JOINTS WITH SEMI-RIGID EPOXY MATERIAL.
4. SMOOTH DOWEL BARS SHALL BE SAWN, NOT SHEARED.

SLAB ON GRADE CONSTRUCTION/CONTROL JOINT

3 / S200

SCALE : NTS

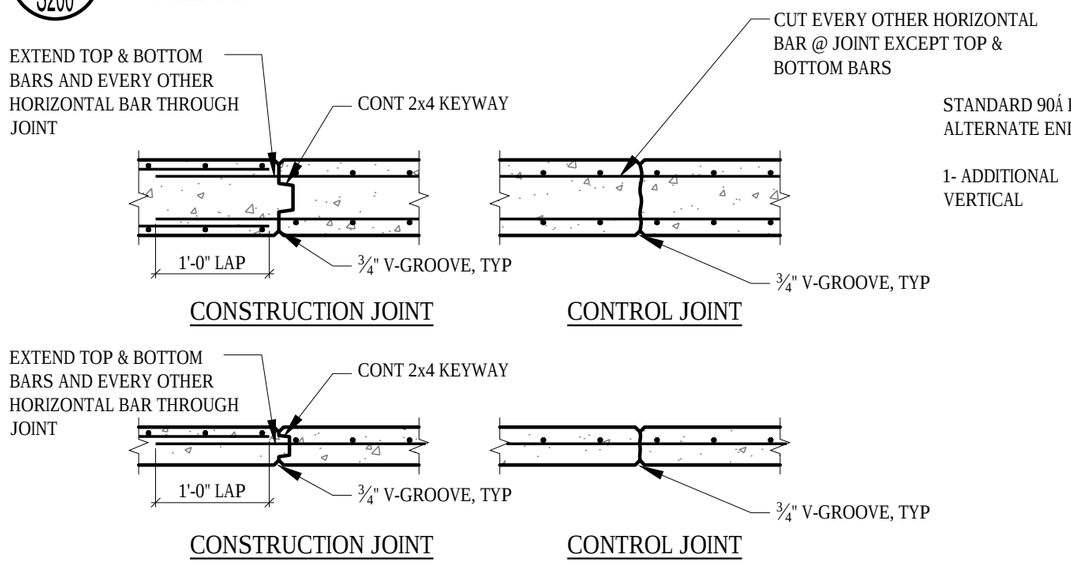

NOTES:

1. WEAKENED PLANE CONSTRUCTION JOINTS SHOULD OCCUR AT INTERVALS OF 25 FEET; AND KEYED CONSTRUCTION JOINTS AT EVERY FOURTH JOINT.
2. SEE PLAN & ASSOCIATED SECTIONS FOR WALL THICKNESS & REINFORCING.
3. CENTER SINGLE LAYER OF STEEL IN WALL SECTION, UNO.

TYPICAL VERTICAL WALL JOINTS

2 / S200

SCALE : NTS

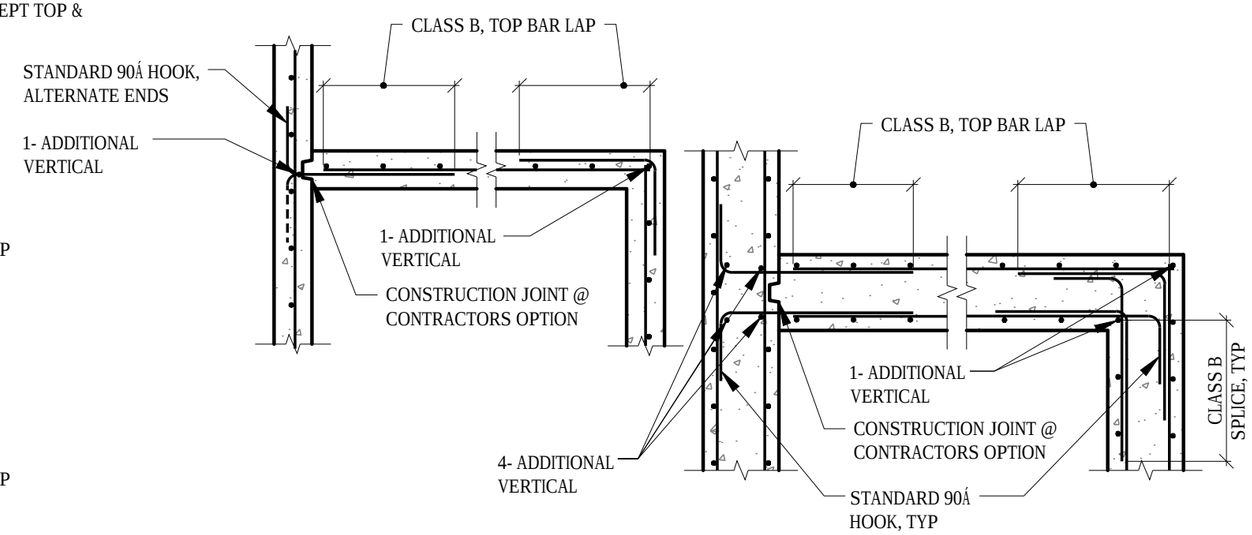

NOTES:

1. CORNER BARS SAME SIZE & SPACING AS HORIZONTAL REINFORCING.
2. SEE PLAN & ASSOCIATED WALL SECTIONS FOR WALL THICKNESS & REINFORCING.
3. CENTER SINGLE LAYER OF STEEL IN WALL SECTION UNO.

REINFORCING @ WALL CORNERS

1 / S200

SCALE : NTS

DORSCHNER ASSOCIATES

Architecture
Planning

Dorschner|Associates, Inc.
849 E. Washington Ave., Ste. 112
Madison, Wisconsin 53703

ISSUED

02.16.15 CONSTRUCTION DOCUMENTS

FOR PRELIMINARY USE ONLY
NOT FOR CONSTRUCTION

PIERCE ENGINEERS INC
CONSULTING STRUCTURAL ENGINEERS
10 West Mifflin St, Suite 205 | Madison, WI 53703
Phone: 608.256.7304 | Fax: 608.256.7306
PE PROJECT 14629

PROJECT
MONONA SCHLUTER PARK RESTROOMS
4500 WINNEQUAH ROAD
MONONA, WI 53716

PROJECT NO.
14013-00

DRAWING
FOUNDATION DETAILS

DATE
02.16.15

S200

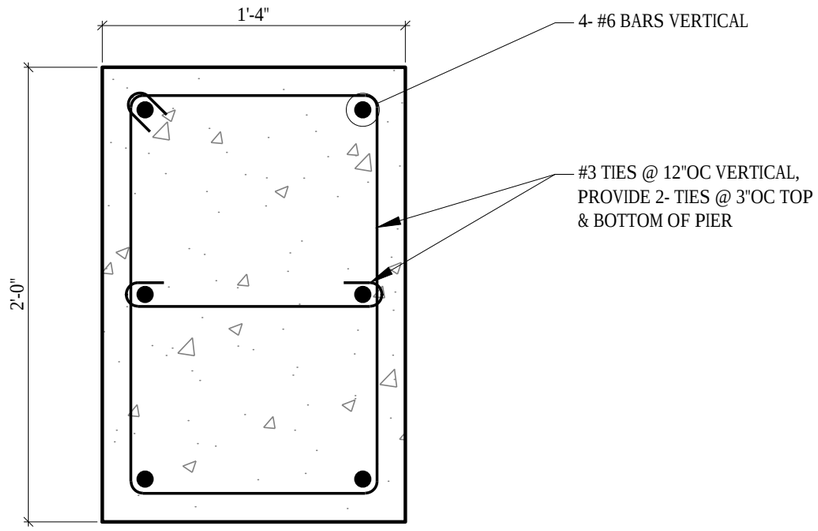

4 / S201

PIER DETAIL

SCALE : NTS

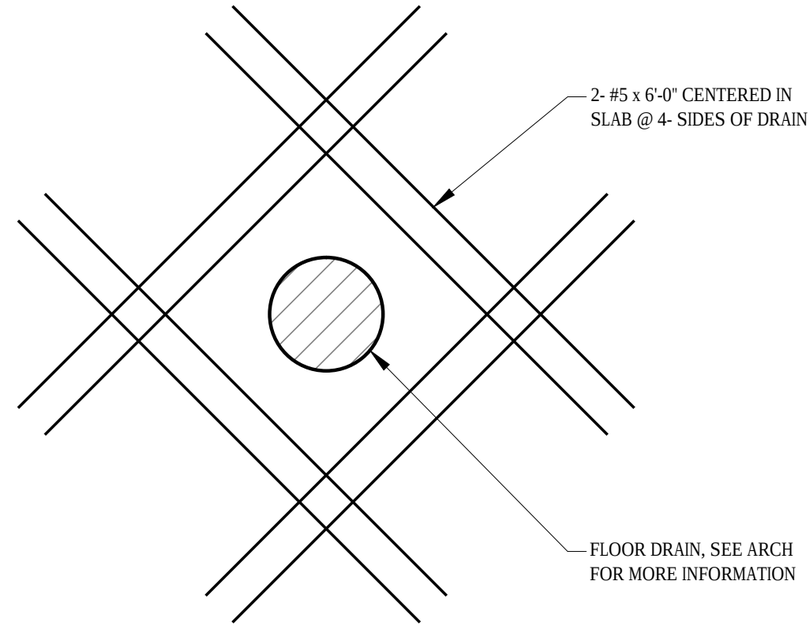

3 / S201

DETAIL @ FLOOR DRAIN

SCALE : NTS

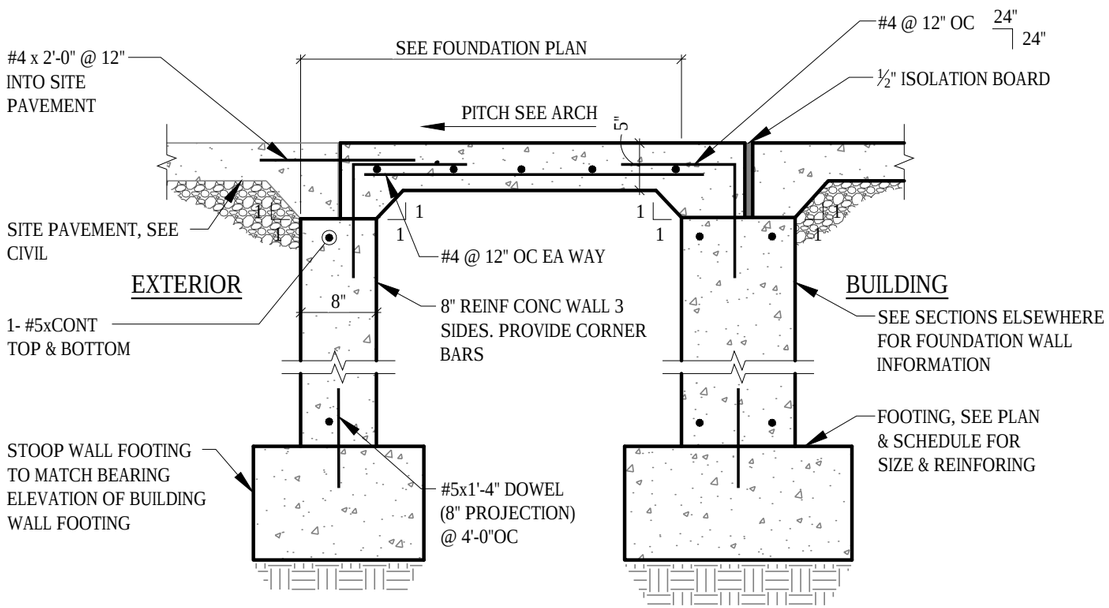

2 / S201

TYPICAL STOOP SECTION

SCALE : NTS

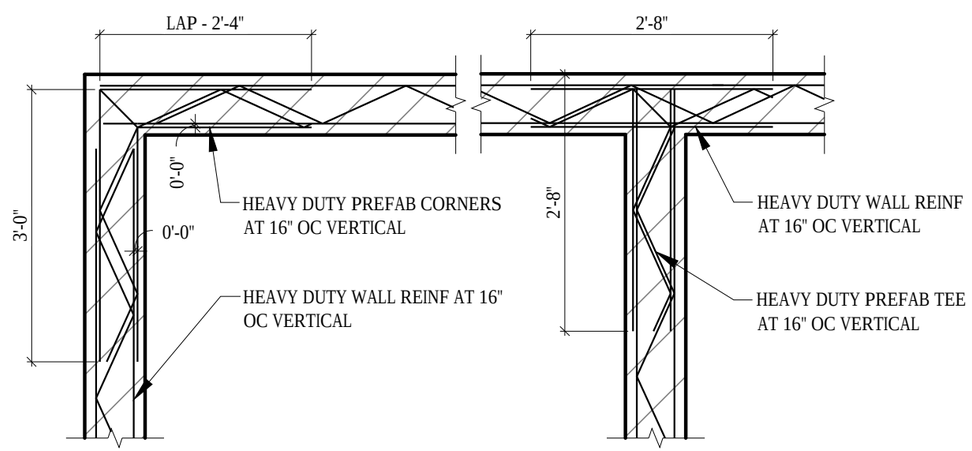

NOTES:

1. USE LADDER TYPE HORIZ REINF AT MULTI-WYTHE AND/OR BRICK AND BLOCK CONSTRUCTION.

1 / S201

HORIZONTAL MASONRY WALL REINFORCEMENT

SCALE : NTS

DORSCHNER ASSOCIATES

Architecture
Planning

Dorschner|Associates, Inc.
849 E. Washington Ave., Ste. 112
Madison, Wisconsin 53703

ISSUED

02.16.15 CONSTRUCTION DOCUMENTS

FOR PRELIMINARY USE ONLY
NOT FOR CONSTRUCTION

PIERCE ENGINEERS INC
CONSULTING STRUCTURAL ENGINEERS
10 West Mifflin St, Suite 205 | Madison, WI 53703
Phone: 608.256.7304 | Fax: 608.256.7306
PE PROJECT 14629

PROJECT
MONONA SCHLUTER PARK
RESTROOMS
4500 WINNEQUAH ROAD
MONONA, WI 53716

PROJECT NO.
14013-00

DRAWING
FOUNDATION DETAILS

DATE
02.16.15

S201

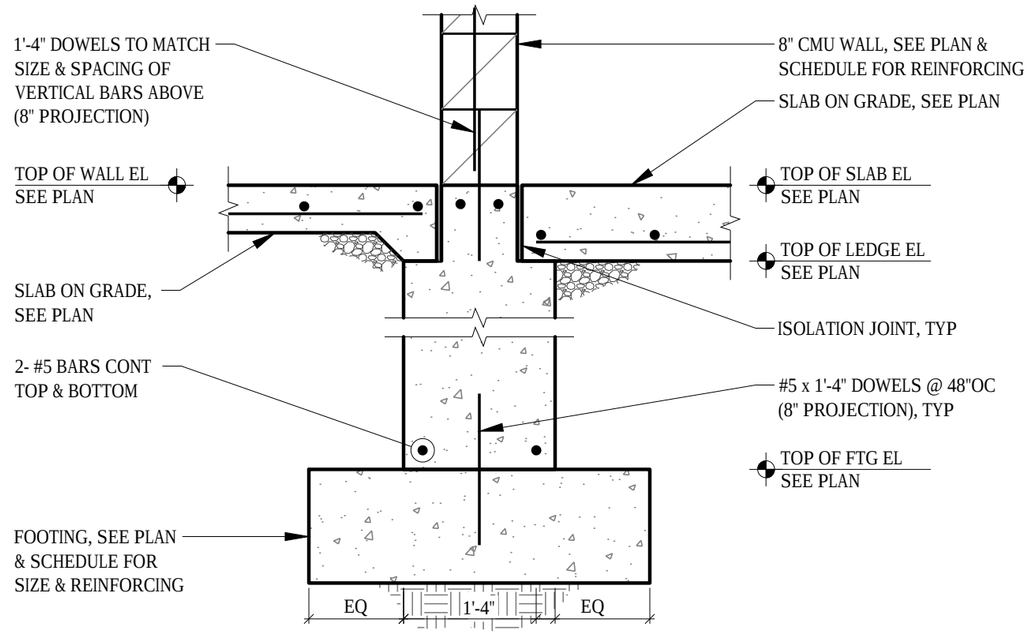

3 / S202 TYPICAL FROST WALL SECTION

SCALE : NTS

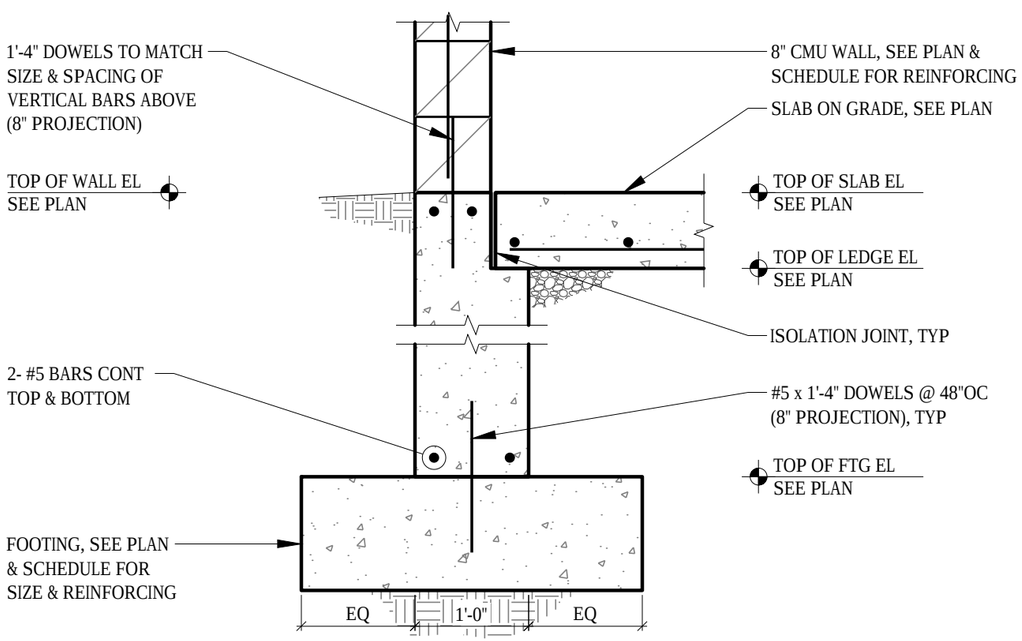

2 / S202 TYPICAL FROST WALL SECTION

SCALE : NTS

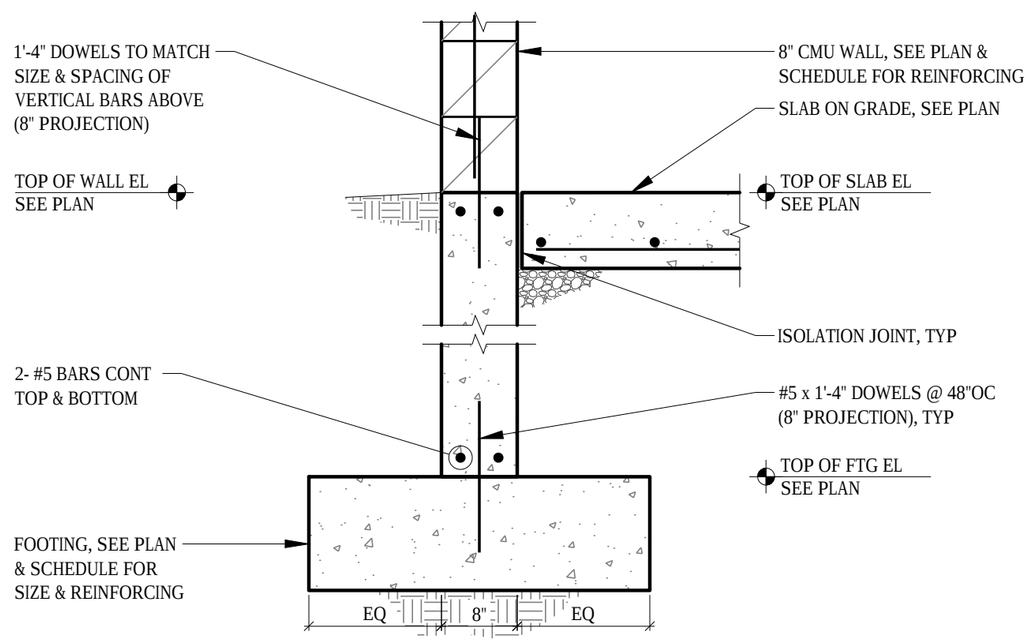

1 / S202 TYPICAL FROST WALL SECTION

SCALE : NTS

DORSCHNER ASSOCIATES
Architecture
Planning
Dorschner|Associates, Inc.
849 E. Washington Ave., Ste. 112
Madison, Wisconsin 53703

ISSUED

02.16.15 CONSTRUCTION DOCUMENTS

FOR PRELIMINARY USE ONLY
NOT FOR CONSTRUCTION

PIERCE ENGINEERS INC
CONSULTING STRUCTURAL ENGINEERS
10 West Mifflin St, Suite 205 | Madison, WI 53703
Phone: 608.256.7304 | Fax: 608.256.7306
PE PROJECT 14629

PROJECT
MONONA SCHLUTER PARK RESTROOMS
4500 WINNEQUAH ROAD
MONONA, WI 53716

PROJECT NO.
14013-00

DRAWING
FOUNDATION DETAILS

DATE
02.16.15

S202

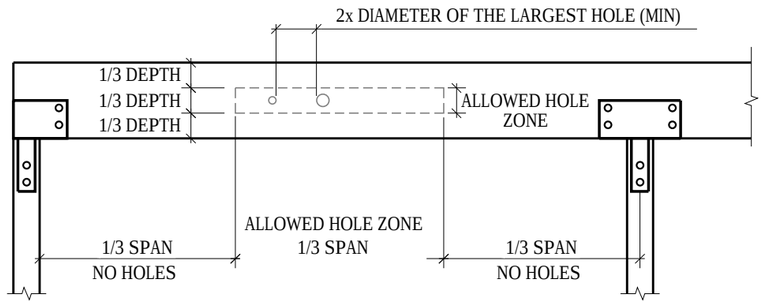

NOTES:

1. THE ALLOWED HOLE ZONE IS SUITABLE ONLY FOR UNIFORMLY LOADED BEAMS USING MAXIMUM LOADS FOR ANY TABLES LISTED IN THIS BROCHURE. FOR OTHER LOAD CONDITIONS OR HOLE CONFIGURATIONS, PLEASE CONTACT YOUR TRUSS JOIST MACMILLAN REPRESENTATIVE.
2. RECTANGULAR HOLES ARE NOT ALLOWED.
3. HOLES IN CANTILEVERS REQUIRE ADDITIONAL ANALYSIS.
4. IF LARGER HOLES ARE REQUIRED CONTACT STRUCTURAL ENGINEER FOR EVALUATION.

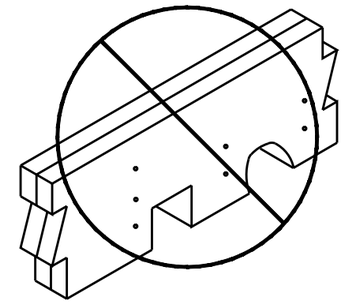

DO NOT CUT, NOTCH OR DRILL HOLES IN MICROLLAM LVL EXCEPT AS INDICATED IN TABLE BELOW AND ILLUSTRATION AT LEFT.

BEAM DEPTH	MAXIMUM ROUND HOLE SIZE
5 1/2"	1 3/4"
7 1/4" TO 18"	2"

2 / S300

ALLOWABLE HOLES IN LVL & PARALLAM BEAMS

SCALE : NTS

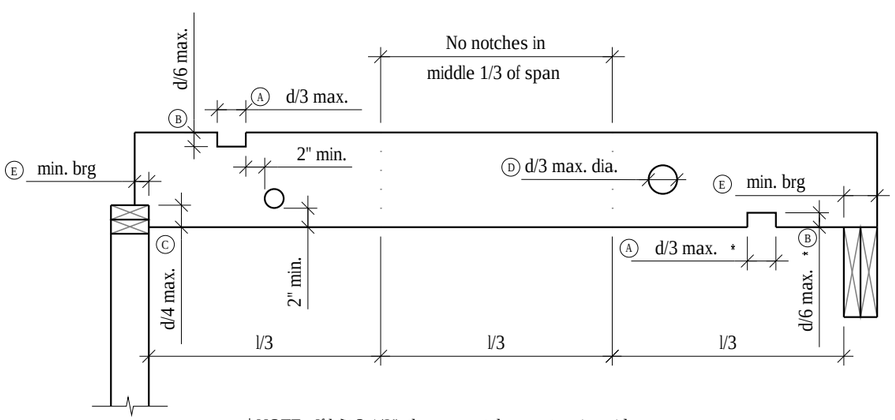

* NOTE: If b≥3 1/2", then no notches on tension side except at ends. b = member thickness.

JOIST SIZE	A MAXIMUM NOTCH LENGTH	B MAXIMUM NOTCH DEPTH	C MAXIMUM END NOTCH DEPTH	D MAXIMUM HOLE DEPTH	E MINIMUM (1) BEARING LENGTH	
2x6	1-13/16"	7/8"	1-3/8"	1-13/16"	1-1/2"	3"
2x8	2-3/8"	1-3/16"	1-13/16"	2-3/8"	1-1/2"	3"
2x10	3-1/16"	1-1/2"	2-5/16"	3-1/16"	1-1/2"	3"
2x12	3-3/4"	1-7/8"	2-13/16"	3-3/4"	1-1/2"	3"

NOTE:

1. MINIMUM BEARING: 1-1/2" ON WOOD OR STEEL: 3" BEARING ON MASONRY.

1 / S300

JOIST HOLES & NOTCHES

SCALE : NTS

DORSCHNER ASSOCIATES
Architecture
Planning
Dorschner|Associates, Inc.
849 E. Washington Ave., Ste. 112
Madison, Wisconsin 53703

ISSUED

02.16.15 CONSTRUCTION DOCUMENTS

FOR PRELIMINARY USE ONLY
NOT FOR CONSTRUCTION

PIERCE ENGINEERS INC
CONSULTING STRUCTURAL ENGINEERS
10 West Mifflin St, Suite 205 | Madison, WI 53703
Phone: 608.256.7304 | Fax: 608.256.7306
PE PROJECT 14629

PROJECT
MONONA SCHLUTER PARK RESTROOMS
4500 WINNEQUAH ROAD
MONONA, WI 53716

PROJECT NO.
14013-00

DRAWING
FRAMING DETAILS

DATE
02.16.15

S300

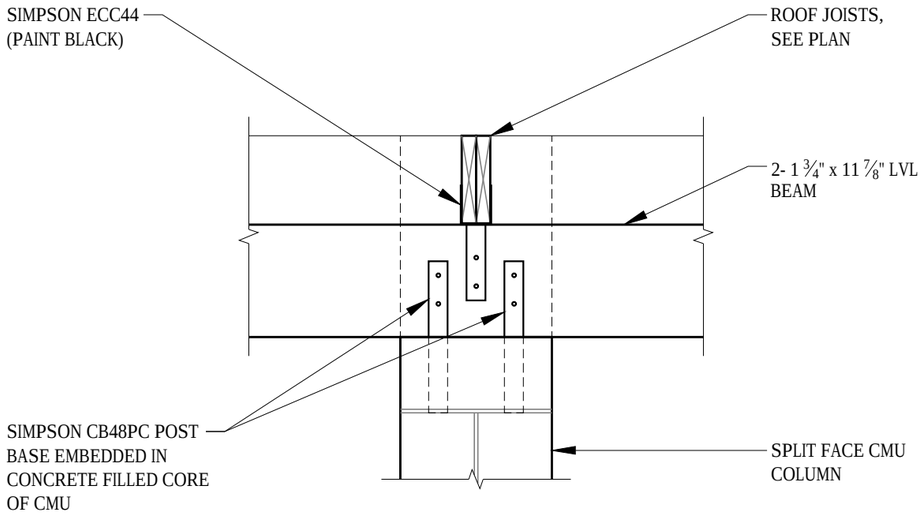

3 / S301 FRAMING SECTION

SCALE : NTS

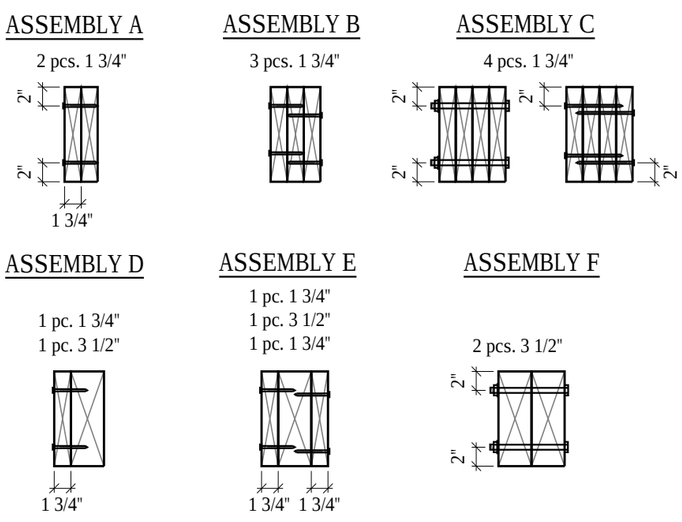

NOTE:
1. 7" WIDE BEAMS SHOULD ONLY BE SIDE-LOADED WHEN LOADS ARE APPLIED TO BOTH SIDES OF THE MEMBERS (TO MINIMIZE ROTATION)

1 / S301 MULTIPLE-MEMBER CONNECTIONS FOR SIDE-LOADED BEAMS

SCALE : NTS

1 3/4" WIDTH PIECES:
1. MINIMUM OF 2 ROWS 12d (3 1/4") COMMON NAILS AT 12" O.C.
2. MINIMUM OF 3 ROWS 12d (3 1/4") COMMON NAILS AT 12" O.C. FOR 14", 16", 18", AND 20" BEAMS.
3. NAILED CONNECTIONS REQUIRE AN ADDITIONAL ROW OF NAILS WHEN NAIL SIZE IS SMALLER THAN SPECIFIED ABOVE (MINIMUM 0.128"x3").
4. LOAD MUST BE APPLIED EVENLY ACROSS ENTIRE BEAM WIDTH. OTHERWISE, USE CONNECTIONS FOR SIDE-LOADED BEAMS.

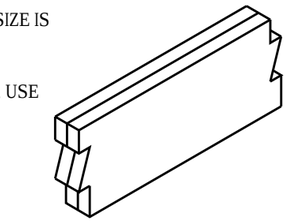

3 1/2" WIDTH PIECES:
1. MINIMUM OF 2 ROWS \" BOLTS AT 24" O.C., STAGGERED.

   FOR ALL OTHER TWO PIECE, CONTINUOUS HEADERS, PROVIDE 16d COMMON NAILS @ 16" O.C. ALONG EACH EDGE, UNLESS NOTED OTHERWISE.

NOTE:
1. MULTIPLE PIECES OF MICROLLAM LVL OR TIMBERSTRAND LSL CAN BE NAILED OR BOLTED TOGETHER TO FORM A HEADER OR BEAM OF THE REQUIRED SIZE, UP TO A MAXIMUM WIDTH OF 7".

2 / S301 MULTIPLE-MEMBER CONN. FOR TOP-LOADED BEAMS

SCALE : NTS

MAXIMUM UNIFORM LOAD APPLIED TO EITHER OUTSIDE MEMBER (PLF)

MULTIPLE ASSEMBLY	NAILED CONNECTION (1), (2)		THROUGH-BOLTED CONNECTION (3)		STRUCTURAL WOOD SCREW CONNECTION (4)	
	2 ROWS 12d (O.148"x3.25") COMMON WIRE AT 12" OC	3 ROWS 12d (O.148"x3.25") COMMON WIRE AT 12" OC	2 ROWS 1/2" BOLTS @ 24" OC	2 ROWS 1/2" BOLTS @ 12" OC	2 ROWS 1/4" x 3 1/2" SCREW @ 24" OC	2 ROWS 1/4" x 3 1/2" SCREW @ 12" OC
A	470	705	505	1015	500	995
B	355	530	380	760	375	745
C			340	680	330 (5)	665 (5)
D	355	530	520	1045	375	745
E	315	470	465	930	330	665
F			860	1720		

NOTES:
1. NAILED CONNECTION VALUES MAY BE DOUBLED FOR 6" ON-CENTER OR TRIPLED FOR 4" O.C. NAIL SPACING.
2. NAILED CONNECTION VALUES REQUIRE AN ADDITIONAL ROW OF NAILS WHEN NAIL SIZE IS SMALLER THAN SPECIFIED ABOVE (MINIMUM 0.128"x3").
3. A307 BOLTS WITH WASHERS REQUIRED. BOLT HOLES TO BE 9/16" MAXIMUM.
4. SCREWS MUST HAVE SELF-DRILLING TIP AND MINIMUM BENDING YIELD STRENGTH OF 217,000 psi. LEAD HOLES MAY BE REQUIRED BY LOCAL BUILDING OFFICIAL.
5. 6" SCREWS REQUIRED.

DORSCHNER ASSOCIATES
Architecture
Planning
Dorschner|Associates, Inc.
849 E. Washington Ave., Ste. 112
Madison, Wisconsin 53703

ISSUED
02.16.15 CONSTRUCTION DOCUMENTS

FOR PRELIMINARY USE ONLY
NOT FOR CONSTRUCTION

PIERCE ENGINEERS INC
CONSULTING STRUCTURAL ENGINEERS
10 West Mifflin St, Suite 205 | Madison, WI 53703
Phone: 608.256.7304 | Fax: 608.256.7306
PE PROJECT 14629

PROJECT
MONONA SCHLUTER PARK RESTROOMS
4500 WINNEQUAH ROAD
MONONA, WI 53716

PROJECT NO.
14013-00

DRAWING
FRAMING DETAILS

DATE
02.16.15

S301

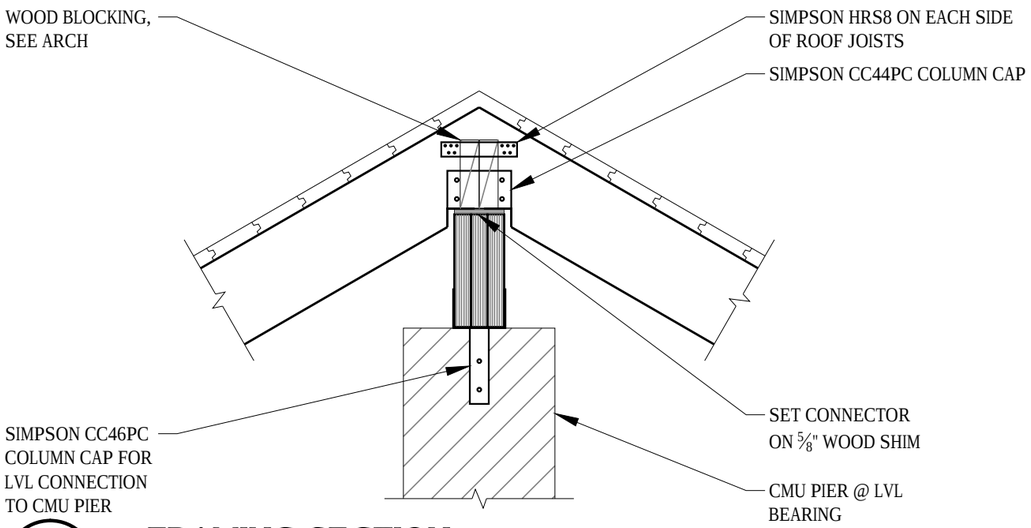

4 / S302 FRAMING SECTION

SCALE : NTS

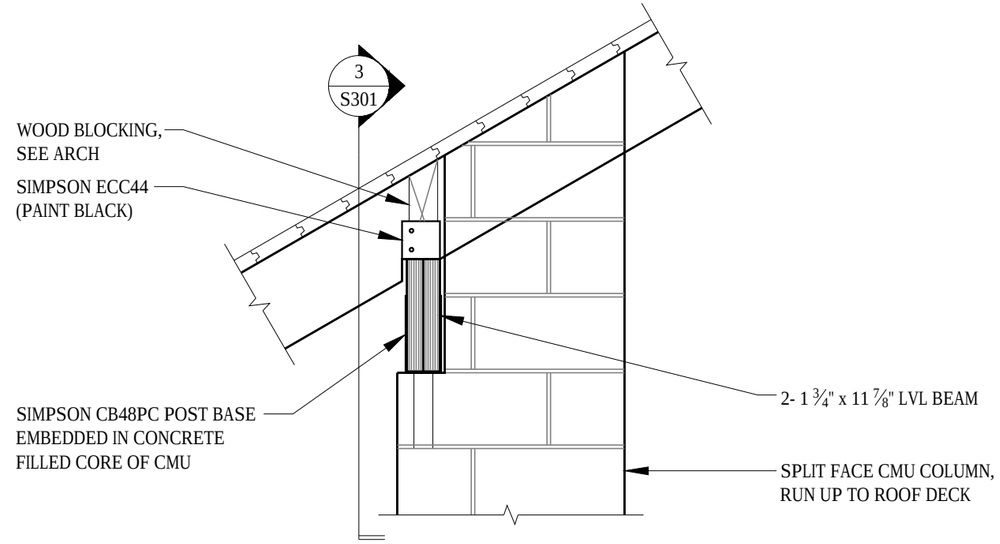

3 / S302 FRAMING SECTION

SCALE : NTS

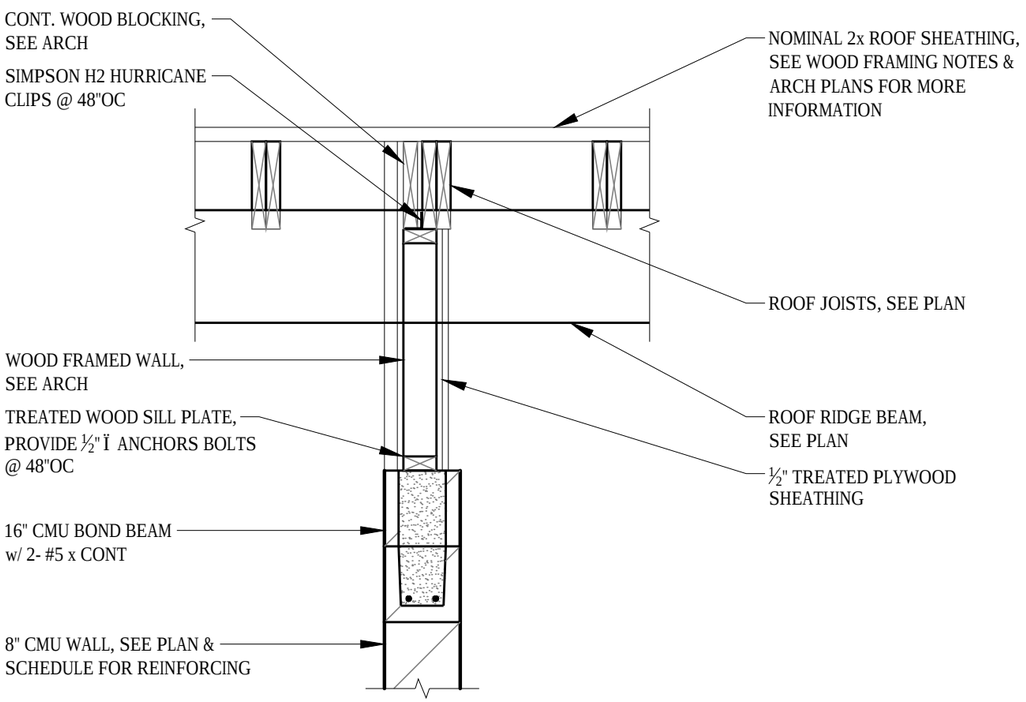

2 / S302 ROOF JOIST BEARING DETAIL

SCALE : NTS

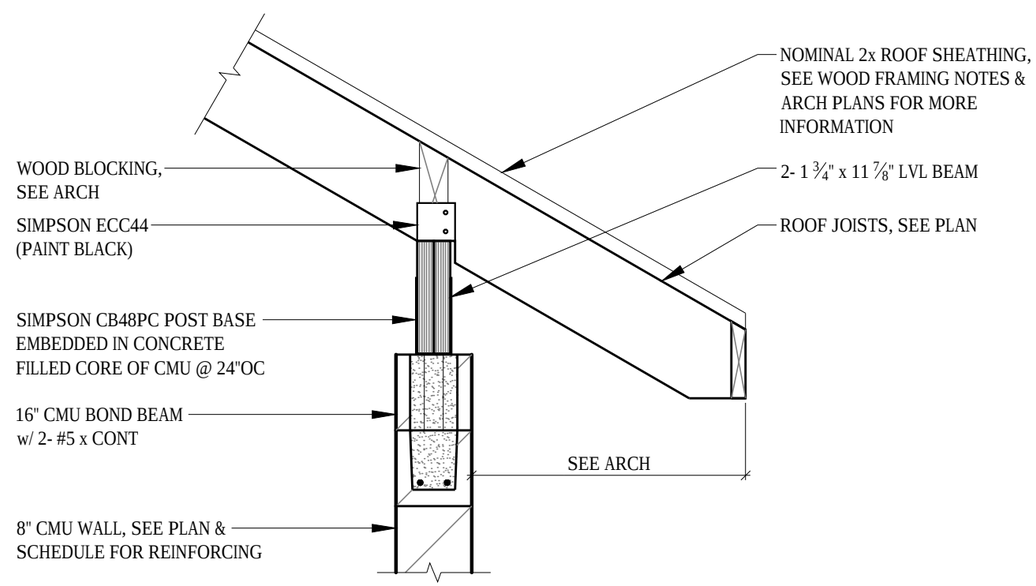

1 / S302 ROOF JOIST BEARING DETAIL

SCALE : NTS

DORSCHNER ASSOCIATES
Architecture
Planning

Dorschner|Associates, Inc.
849 E. Washington Ave., Ste. 112
Madison, Wisconsin 53703

ISSUED

02.16.15 CONSTRUCTION DOCUMENTS

FOR PRELIMINARY USE ONLY
NOT FOR CONSTRUCTION

PIERCE ENGINEERS INC
CONSULTING STRUCTURAL ENGINEERS
10 West Mifflin St, Suite 205 | Madison, WI 53703
Phone: 608.256.7304 | Fax: 608.256.7306
PE PROJECT 14629

PROJECT
MONONA SCHLUTER PARK RESTROOMS
4500 WINNEQUAH ROAD
MONONA, WI 53716

PROJECT NO.
14013-00

DRAWING
FRAMING DETAILS

DATE
02.16.15

S302

PLUMBING FIXTURE SCHEDULE

ID	FIXTURE	WASTE			WATER				DETAIL/ SHEET	DESCRIPTION/REMARKS
		DFU	TRAP	VENT (MIN)	COLD		HOT			
					CWFU	SIZE	HWFU	SIZE		
DF-1	DRINKING FOUNTAIN	0.5	—	—	0.25	1/2"	—	—	1/P000	FIXTURE: ELKAY LK4420BF1U-FRK WATER BOTTLE FILLING STATION AND DRINKING FOUNTAIN PEDESTAL, FREEZE-RESISTANT VALVE SYSTEM, STEEL CONSTRUCTION, MANUFACTURER'S STANDARD COLOR POWDER COAT FINISH FROM FACTORY (COLOR TO BE SELECTED BY ARCHITECT).
										FIXTURE SUPPORT: ELKAY DIRECT BURY FOUNTAIN ADAPTER KIT 97890C, SEE MANUFACTURER'S WRITTEN INSTRUCTIONS FOR PEDESTAL MOUNTING.
L-1	LAVATORY (ADA COMPLIANT)	1	1-1/4"	1-1/2"	0.5	1/2"	—	—	2/P000	FIXTURE: KOHLER KINGSTON K-2007, WALL HUNG LAVATORY, VITREOUS CHINA LAVATORY, WHITE, 21"x18" OVERALL SIZE, SINGLE FAUCET HOLE, 5" BACKSPLASH, WITH OVERFLOW, ADA COMPLIANT. INSTALL COMMERCIAL GRADE SUPPORT FOR WALL HUNG LAVATORY, MOUNTED TO FLOOR.
										FAUCET: CHICAGO ELECTRONIC-DC FAUCET 116.201.AB.1, SOLID BRASS CONSTRUCTION, CHROME PLATED, SINGLE AMBIENT TEMPERATURE SUPPLY, 0.5 GPM AERATOR, SINGLE HOLE MOUNTING, VANDAL RESISTANT, ADA COMPLIANT.
										TRAP & DRAIN: 17 GAUGE BRASS PRE-WRAPPED OFFSET DRAIN P-TRAP, WITH GRID STRAINER DRAIN.
										STOPS & SUPPLIES: McGUIRE H2167LK, LOOSE KEY QUARTER TURN ANGLE STOPS WITH CHROME PLATED ESCUTCHEONS AND CHROME PLATED COPPER RISER SUPPLIES.
UR-1	URINAL (ADA HEIGHT)	2	2	1-1/2"	4	3/4"	—	—	—	FIXTURE: KOHLER DEXTER K-5016-ET VITREOUS CHINA URINAL, WALL MOUNTED, SIPHON JET, 3/4" TOP SPUD, 0.5 GPF, ADA HEIGHT.
										FLUSH VALVE: SLOAN ROYAL 186-0.5 URINAL FLUSH VALVE, MANUAL OPERATION, 3/4" TOP SPUD, 0.5 GPF, CHROME FINISH, ADA COMPLIANT.
										SUPPORT: COMMERCIAL GRADE, WALL HUNG URINAL SUPPORT, STEEL STANCHIONS, IRON WELDED FEET, STEEL SLEEVES, FASTEN TO FLOOR.
WC-1	WATER CLOSET (STANDARD HEIGHT)	6	4"	2"	6.5	1-1/2"	—	—	—	FIXTURE: KOHLER KINGSTON K-4323, WALL HUNG, FLUSH VALVE TOILET, REAR SPUD, WHITE VITREOUS CHINA, ELONGATED BOWL, 1.6 GPF, 2.125" TRAPWAY, 15" RIM HEIGHT.
										FLUSH VALVE: SLOAN ROYAL OPTIMA 152-1.6 ES-S TMO WATER CLOSET FLUSH VALVE, HIGH EFFICIENCY, SENSOR AND MANUALLY PUSH BUTTON OPERATED, 1-1/2" REAR SPUD, COMPONENTS SHALL BE CONCEALED BEHIND WALL, 1.6 GPF, CHROME PLATED, ADA COMPLIANT. ELECTRICAL: 120V PRIMARY/24V SECONDARY TRANSFORMER SLOAN EL -154.
										SEAT: BEMIS 1655-SSC TOILET SEAT, INJECTION MOLDED WHITE PLASTIC, OPEN FRONT, ELONGATED BOWL, STAINLESS STEEL HINGES.
										SUPPORT: COMMERCIAL GRADE, WALL HUNG WATER CLOSET SUPPORT, STEEL STANCHIONS, IRON WELDED FEET, STEEL SLEEVES, FASTEN TO FLOOR.
WC-2	WATER CLOSET (ADA HEIGHT)	6	4"	2"	6.5	1-1/2"	—	—	—	FIXTURE: SAME AS WC-1, MOUNTED AT ADA HEIGHT.
										FLUSH VALVE: SAME AS WC-1, MOUNTED AT ADA HEIGHT.
										SEAT: BEMIS 1655-SSC TOILET SEAT, INJECTION MOLDED WHITE PLASTIC, OPEN FRONT, ELONGATED BOWL, STAINLESS STEEL HINGES.
										SUPPORT: SAME AS WC-1.
WH-1	WALL HYDRANT	—	—	—	4	3/4"	—	—	—	FIXTURE: WOODFORD MODEL 65, EXTERNAL FREEZELESS WALL HYDRANT, AUTOMATIC DRAINING, INTEGRAL VACUUM BREAKER, 3/4" HOSE CONNECTION, LOOSE TEE KEY.

PLUMBING DRAIN & CLEANOUT SCHEDULE

ID	FIXTURE	WASTE			DESCRIPTION/REMARKS
		DFU	TRAP	VENT	
FD-1	FLOOR DRAIN	3	3"	1-1/2"	FIXTURE: ZURN ZN415-B, CAST IRON BODY, 5" DIAMETER NICKEL BRONZE "TYPE B" STRAINER, COMBINATION INVERTIBLE MEMBRANE CLAMP, AND ADJUSTABLE COLLAR.
FD-2	FLOOR DRAIN	3	3"	1-1/2"	FIXTURE: WATTS FD-810-1, CAST IRON BODY, 8" DIAMETER NICKEL BRONZE STRAINER, SOLID BOTTOM SEDIMENT BUCKET WITH WEEPHOLES, COMBINATION INVERTIBLE MEMBRANE CLAMP, AND ADJUSTABLE COLLAR.
FCO	FLOOR CLEANOUT	—	—	—	UNFINISHED AREAS: ZURN ZN1400-BP, CAST IRON BODY, HEAVY DUTY CLEANOUT HOUSING, WITH NICKEL BRONZE TOP & INTERNAL CLEANOUT.

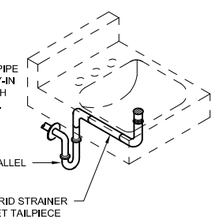

2 P000 WALL HUNG LAVATORY - BARRIER FREE

SCALE: NONE

PLUMBING LEGEND

- SANITARY DRAIN, WASTE OR SEWER (SAN)
- VENT (V)
- CW — COLD WATER
- W — DOMESTIC WATER SERVICE
- TEE (BRANCH TO SIDE)
- TEE (BRANCH DOWN)
- RISER UP
- RISER DOWN
- CLEANOUT (CO) / OR / WALL CLEANOUT (WCO) / FLOOR CLEANOUT (FCO) / YARD CLEANOUT (YCO)
- FLOW
- HOSE BIBB (HB) OR WALL HYDRANT (WH)
- CAP
- SHUT-OFF VALVE
- FIXTURE STOP
- VALVE IN RISER
- WATER HAMMER ARRESTOR
- FLOOR DRAIN (FD)
- # NEW WORK KEYED NOTE
- # REVISION KEYED NOTE
- X / PX TAG FOR CONTINUATION MATCH POINTS

ABBREVIATIONS

AFF	ABOVE FINISHED FLOOR
AFG	ABOVE FINISHED GRADE
BFF	BELOW FINISHED FLOOR
BFG	BELOW FINISHED GRADE
CO	CLEANOUT
CW	COLD WATER
DF	DRINKING FOUNTAIN
EC	ELECTRICAL CONTRACTOR
FCO	FLOOR CLEANOUT
FD	FLOOR DRAIN
GC	GENERAL CONTRACTOR
HB	HOSE BIBB
HC	HVAC CONTRACTOR
IE	INVERT ELEVATION
L	LAVATORY
PC	PLUMBING CONTRACTOR
SAN	SANITARY
UR	URINAL
V	VENT
VTR	VENT THRU ROOF
W	DOMESTIC WATER SERVICE
WC	WATER CLOSET
WCO	WALL CLEAN OUT
WH	WALL HYDRANT
WHA	WATER HAMMER ARRESTOR
YCO	YARD CLEANOUT

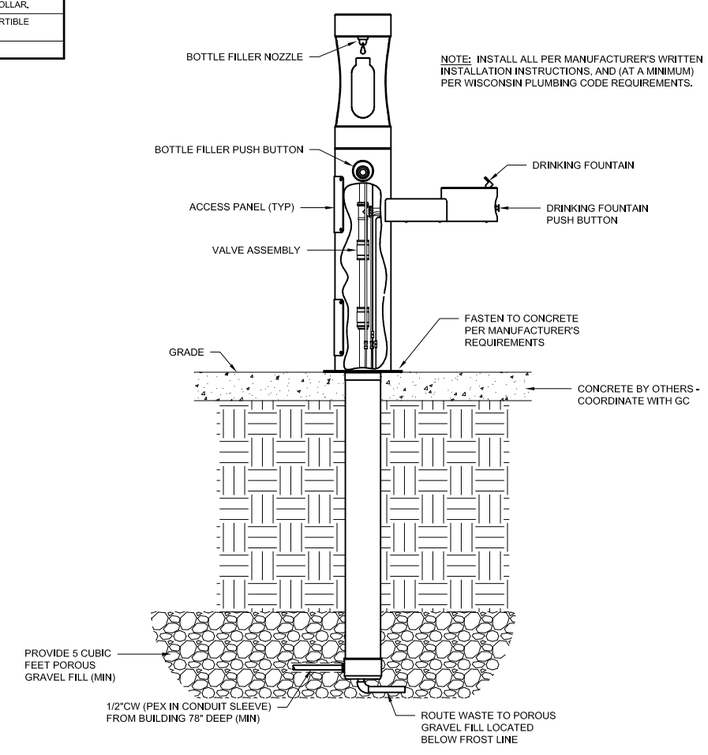

NOTE: INSTALL ALL PER MANUFACTURER'S WRITTEN INSTALLATION INSTRUCTIONS, AND (AT A MINIMUM) PER WISCONSIN PLUMBING CODE REQUIREMENTS.

1 P000 DRINKING FOUNTAIN (DF-1)

SCALE: NONE

DORSCHNER ASSOCIATES

Architecture
Planning

Dorschner|Associates, Inc.
849 E. Washington Ave., Ste. 112
Madison, Wisconsin 53703

JDR ENGINEERING, INC.
5525 NOBEL DRIVE
SUITE 110
MADISON, WI 53711
ph:608.277.1728 fax:608.271.7046
JDR Project No. 140215

ISSUED

02.16.15 CONSTRUCTION DOCUMENTS

PROJECT
MONONA SCHLUTER PARK RESTROOMS
4500 WINNEQUAH ROAD
MONONA, WI 53716

PROJECT NO.
14013-00

DRAWING
PLUMBING SYMBOLS, ABBREVIATIONS, SCHEDULES AND DETAILS

DATE
02.16.15

P000

PLUMBING SYSTEMS SPECIFICATION

PART 1 - GENERAL

SCOPE
DRAWINGS AND GENERAL PROVISIONS OF CONTRACT, INCLUDING GENERAL AND SUPPLEMENTARY CONDITIONS AND DIVISION 01 SPECIFICATION SECTIONS, APPLY TO WORK OF THIS SECTION.

PLUMBING INCLUDES INTERIOR SANITARY WASTE AND VENT, AND DOMESTIC WATER SUPPLY.

DEFINITIONS:
FURNISH:
SUPPLY AND DELIVER TO PROJECT SITE READY FOR UNPACKING, ASSEMBLY AND INSTALLATION

INSTALL:
OPERATIONS AT SITE INCLUDING UNPACKING, ASSEMBLING, ERECTING, PLACING, ANCHORING, APPLYING, FINISHING, CLEANING, AND CONNECTING RELATED DEVICES REQUIRED FOR PRODUCT FULLY FUNCTIONAL FOR INTENDED USE AFTER INSTALLATION.

PROVIDE:
FURNISH AND INSTALL, SUCH THAT PRODUCT IS FULLY FUNCTIONAL FOR INTENDED USE.

GENERAL PROVISIONS
THE PLUMBING SYSTEMS SHALL BE DESIGNED AND INSTALLED IN CONFORMANCE WITH WISCONSIN UNIFORM PLUMBING CODE (WISCONSIN ADMINISTRATIVE CODE, CHAPTERS SPS 382 AND SPS 384.).

FEES, PERMITS AND INSPECTIONS SHALL BE OBTAINED AND PAID FOR. INCLUDED ARE FEES FOR WATER AND SANITARY SEWER UTILITIES. IMPACT FEES SHALL BE COORDINATED WITH AND BE PAID FOR BY THE OWNER.

SUBMIT THE QUANTITY OF SHOP DRAWINGS AS SPECIFIED UNDER THE DIVISION 01 SPECIFICATION SECTION - SUBMITTALS. INCLUDE WIRING DIAGRAMS OF ELECTRICALLY POWERED EQUIPMENT.

SUBMIT SHOP DRAWINGS FOR MATERIALS AND EQUIPMENT PRIOR TO ORDERING/PURCHASING ANY MATERIALS. ALLOW AMPLE TIME FOR REVIEW AND COORDINATION WITH OTHER DIVISIONS OF WORK.

SUBMIT MATERIALS, FIXTURES, AND EQUIPMENT FOR RECORD PURPOSES AND FOR OPERATION AND MAINTENANCE MANUAL PREPARATION. PROVIDE THE OWNER WITH (2) HARD COVER RING TYPE BINDERS ENTITLED "OPERATING AND MAINTENANCE MANUAL" FOR MATERIALS, FIXTURES, AND EQUIPMENT USED ON THE PROJECT.

AT THE COMPLETION OF THE PROJECT, THE CONTRACT DRAWINGS SHALL BE ADJUSTED TO BECOME ACCURATE AS-BUILT DRAWINGS. TRACINGS AND AUTOCAD FILES OF THE AS-BUILT DRAWINGS SHALL BE TURNED OVER TO THE OWNER'S REPRESENTATIVE.

WORK SHALL BE WARRANTED FOR ONE YEAR AFTER DATE OF ACCEPTANCE.

COORDINATE ELECTRICAL CONNECTIONS AND POWER AND CONTROL WIRING REQUIREMENTS.

KEEP PREMISES FREE FROM WASTE MATERIALS.

PIPE SLEEVES OR OPENINGS SHALL BE SET FOR PIPES PASSING THROUGH NEW MASONRY OR CONCRETE WALLS AND FLOORS. SLEEVES FOR PIPING AT EXTERIOR PENETRATIONS ABOVE AND BELOW GRADE SHALL BE SCHEDULE 40 BLACK STEEL PIPE AND SHALL EXTEND THROUGH THE CONSTRUCTION. PROVIDE FLANGES FOR SUPPORTING SLEEVES THROUGH EXISTING CONSTRUCTION AS APPLICABLE.

COORDINATE THE LOCATION OF SLEEVES, OPENINGS, CHASES, AND FURRED SPACES WITH THE OTHER CONTRACTORS. PROVIDE SLEEVES, HANGERS AND INSERTS THAT ARE TO BE BUILT INTO THE STRUCTURE DURING THE PROGRESS OF CONSTRUCTION.

GROUT OPENINGS THROUGH CONCRETE OR MASONRY, INCLUDING SPACE BETWEEN SLEEVES AND WALLS OF FLOORS, WITH DOW 8640 OR 8641 SEALANT.

PROVIDE PIPE HANGERS OR STRUT CONNECTED TO STRUCTURAL ELEMENTS TO SUPPORT PIPING.

IDENTIFY PIPING SYSTEMS WITH LABELS OR STENCILS. INCLUDE VALVE TAGS FOR SHUTOFF VALVES.
EXCAVATE TRENCHES FOR INSTALLATION OF PIPING.

PROVIDE 6 INCHES OF SAND OR PEA GRAVEL FOR PIPE BEDDING. BACKFILL AROUND PIPE TO 12 INCHES ABOVE PIPE WITH SAND OR PEA GRAVEL.

REFER TO DIVISION 02 SECTIONS FOR EARTHWORK. BACKFILL TRENCHES WITH SAND OR GRAVEL TO ROUGH GRADE ELEVATION UNDER PAVED SURFACES. BACKFILL TRENCHES WITH COMMON EXCAVATION MATERIAL FOR AREAS WITH GRASS.

WHEN TRENCHING EXTENDS BEYOND CONSTRUCTION LIMIT LINES, RESTORE SURFACE TO ORIGINAL CONDITION.

DESIGN CRITERIA
SANITARY DRAIN AND VENT:
MINIMUM SLOPE:
1/4 IN/FT (THROUGH 2 INCH PIPE)
1/8 IN/FT (3 INCH AND GREATER PIPE)

MINIMUM VELOCITY:
2 FEET/SEC

MAXIMUM PRESSURE FLUCTUATION:
2 INCH WATER COLUMN

DOMESTIC WATER:
UNIFORM PRESSURE LOSS METHOD OF SIZING.

MAXIMUM VELOCITY:
8 FT/SEC

MAXIMUM SYSTEM PRESSURE:
80 LB/IN2

SYSTEM DESCRIPTIONS
SANITARY DRAIN AND VENT:
PROVIDE A GRAVITY DRAINAGE SYSTEM FOR WASTE DISCHARGE FROM PLUMBING FIXTURES AND FLOOR DRAINS. THE VARIOUS FIXTURE DRAINS SHALL COLLECT IN THE BUILDING DRAIN AND SLOPE TO THE SOUTH WALL OF THE BUILDING TO CONNECT WITH THE SANITARY LATERAL PROVIDED BY THE SITE UTILITY CONTRACTOR.

PROVIDE A SANITARY VENT SYSTEM TO PROTECT THE TRAPS. THE VENTS SHALL CONNECT TO A HEADER PIPE AND TERMINATE THROUGH THE ROOF AT VARIOUS LOCATIONS.

WATER DISTRIBUTION:
CONNECT A DOMESTIC LINE TO THE WATER SERVICE AT THE MECHANICAL ROOM. PROVIDE A METER AND DISTRIBUTE DOMESTIC COLD WATER USING A HORIZONTAL DISTRIBUTION SYSTEM. CONNECT COLD WATER TO PLUMBING FIXTURES.

PART 2 - PRODUCTS

SANITARY DRAIN AND VENT
PIPE AND FITTINGS:
CAST IRON, SOIL OR NO-HUB, SERVICE WEIGHT, ASTM A74 OR CISPI 301, WITH RUBBER GASKET ASTM C564.

PVC, SCHEDULE 40, ASTM D-1784 WITH PVC-DWV SOCKET FITTINGS, ASTM D-2665 WITH PVC SOLVENT CEMENT, ASTM D-2564. SOLID WALL PVC ONLY.

DRAINS AND CLEANOUTS:
BY JOSAM, J.R. SMITH, SIOUX CHIEF, WADE, WATTS, OR ZURN. REFER TO PLUMBING EQUIPMENT SCHEDULE ON DRAWINGS FOR SPECIFIC ITEMS.

TESTING:
HYDROSTATIC TEST SANITARY PIPING TO 10 FEET WATER COLUMN WITH NO LEAKS.

DOMESTIC WATER DISTRIBUTION
PIPE AND FITTINGS:
INTERIOR BELOW GROUND:
FOR PIPING 2-INCHES AND SMALLER, COPPER TUBE, TYPE K, SOFT TEMPER, ASTM B88, WITH WROUGHT COPPER FITTINGS. ANSI B16.22. JOIN USING LEAD FREE FLUX AND SOLDER, ASTM B32.

PLASTIC, CROSS-LINKED POLYETHYLENE ("PEX"), PIPE AND FITTINGS, ASTM F876, ASTM F877, 100 PSI PRESSURE RATING AT 180F.

INTERIOR ABOVE GROUND:
COPPER TUBE, TYPE L, HARD TEMPER, ASTM SPECIFICATION B88, WROUGHT COPPER SWEAT FITTINGS AND 95/5 SOLDER JOINTS TIN-ANTIMONY, OR OTHER LEAD FREE SOLDER.

WROUGHT COPPER OR CAST BRONZE FITTINGS, GROOVED ENDS, JOINED WITH MECHANICAL COUPLINGS, RUBBER GASKET SEAL, VICTAULIC STYLE 606.

VALVES:
SHUTOFF VALVES:
BALL VALVE, BRONZE BODY, TWO PIECE, CONVENTIONAL PORT, NIBCO, SERIES 585.

TESTING:
TEST WATER PIPING BEFORE CONNECTING FIXTURES WITH HYDROSTATIC PRESSURE OF 100 PSI WITHOUT LOSS OF PRESSURE FOR AT LEAST TWO HOURS.

DISINFECTING:
PROVIDE CHLORINE DISINFECTING. TEST FOR PRESENCE OF DISINFECTING AGENT AT REMOTE LOCATIONS TO ENSURE THE DISINFECTING AGENT HAS REACHED THROUGHOUT THE DOMESTIC WATER SYSTEMS. OTHER DISINFECTING METHODS MAY BE USED WITH PRIOR APPROVAL OF THE ARCHITECT AND LOCAL AUTHORITIES.
TEST FOR BACTERIA AFTER DISINFECTING AND DOMESTIC WATER SYSTEM IS FLUSHED.

INSULATION
INSULATE DOMESTIC WATER PIPING.

ACCEPTABLE MANUFACTURERS:
ARMSTRONG, HALSTEAD , JOHNS-MANVILLE, KNAUF, OR OWENS-CORNING.

GLASS FIBER INSULATION:
MANVILLE MICRO-LOK MEETING ASTM C547; RIGID MOLDED, NON-COMBUSTIBLE, "K" VALUE: 0.23 AT 75°F, MAXIMUM SERVICE TEMPERATURE: 850°F, WITH VAPOR RETARDER JACKET: AP-T PLUS WHITE KRAFT PAPER REINFORCED WITH GLASS FIBER YARN AND BONDED TO ALUMINUM FOIL, SECURE WITH SELF-SEALING LONGITUDINAL LAPS AND BUTT STRIPS OR AP JACKET WITH OUTWARD CLINCH EXPANDING STAPLES OR VAPOR BARRIER MASTIC AS NEEDED.

CONNECTION:
WATERPROOF VAPOR RETARDER ADHESIVE; HALSTEAD CONTACT ADHESIVE.

UV-PROTECTION:
OUTDOOR PROTECTIVE COATING; ARMSTRONG PROTECTIVE COATING.

MINIMUM INSULATION THICKNESS:

PIPE SIZESYSTEMS	1" OR LESS	1-1/4" TO 2"	2-1/2" TO 4"	5" AND UP
DOMESTIC COLD WATER	1/2"	1/2"	1"	1"

DORSCHNER ASSOCIATES
Architecture
Planning

Dorschner|Associates, Inc.
849 E. Washington Ave., Ste. 112
Madison, Wisconsin 53703

JDR
ENGINEERING, INC.
5525 NOBEL DRIVE
SUITE 110
MADISON, WI 53711
ph:608.277.1728 fax:608.271.7046
JDR Project No. 140215

ISSUED

02.16.15 CONSTRUCTION DOCUMENTS

PROJECT
MONONA SCHLUTER PARK RESTROOMS
4500 WINNEQUAH ROAD
MONONA, WI 53716

PROJECT NO.
14013-00

DRAWING
PLUMBING SPECIFICATIONS

DATE
02.16.15

P001

PLUMBING FIXTURES
REFER TO SCHEDULE FOR SPECIFIC ITEMS.

VITREOUS CHINA PRODUCTS:
KOHLER AS SCHEDULED ON DRAWINGS.

FLUSH VALVES:
SLOAN AS SCHEDULED ON DRAWINGS.

CARRIERS:
J.R. SMITH, JOSAM, MIFAB, WADE, WATTS, OR ZURN.

FAUCET FITTINGS:
CHICAGO FAUCET AS SCHEDULED ON DRAWINGS.

DRINKING FOUNTAINS:
ELKAY AS SCHEDULED ON DRAWINGS.

DRAINS, TRAPS, STOPS, AND SUPPLIES:
BRASS CRAFT, CHICAGO FAUCET, DEARBORN, EBC, KEENEY, KOHLER, MCGUIRE, OR ZURN.

HOSE BIBBS:
INTERIOR FAUCET OR EXTERIOR HYDRANT WITH HOSE CONNECTION. INCLUDE HOSE APPLIED BACK FLOW DEVICE, ASSE 1011 OR ASSE 1019. CHICAGO, J.R. SMITH, WOODFORD, OR ZURN.

PART 3 - EXECUTION

GENERAL
INSTALL PLUMBING SYSTEMS IN ACCORDANCE WITH WISCONSIN UNIFORM PLUMBING CODE. THE PLUMBING CONTRACTOR IS THE ENGINEER OF RECORD AND IS RESPONSIBLE FOR DESIGN AND INSTALLATION.

SANITARY DRAIN AND VENT SYSTEMS INSTALLATION
CONNECT DRAIN AND VENT PIPING TO EACH FIXTURE AND PIECE OF EQUIPMENT AND INSTALL REQUIRED PIPING AS SHOWN ON DRAWINGS. PROVIDE NECESSARY FITTINGS AND HARDWARE TO MAKE REQUIRED OFFSETS AND TRANSITIONS.

CHANGES IN DIRECTION OF DRAINAGE PIPING SHALL BE MADE BY THE APPROPRIATE USE OF 45 DEGREE WYES, LONG OR SHORT SWEEP 1/4 BENDS, 1/6, 1/8, 1/16 BENDS OR COMBINATION.

FITTINGS SHALL BE INSTALLED TO MAKE FOR THE LEAST POSSIBILITY OF STOPPAGE. HORIZONTAL DRAINAGE PIPING LESS THAN 3 INCHES SHALL BE PITCHED A MINIMUM OF 1/4 INCH PER FOOT OR RUN. PIPING 3" TO 10" SHALL BE PITCHED A MINIMUM OF 1/8" PER FOOT OF RUN.

WHEN RUNNING DRAIN PIPING BELOW A FOOTING AND PARALLEL TO IT, PIPING SHALL BE AT LEAST ONE FOOT GREATER IN DISTANCE AWAY FROM FOOTING THAN BELOW ITS BOTTOM. WHERE POSSIBLE, RUN SEWERS AT CENTERPOINT BETWEEN TWO PARALLEL FOOTINGS AND MAINTAIN ABOVE MENTIONED DISTANCES AT A MINIMUM. WHEN RUNNING DRAIN PIPING UNDER A FOOTING, DISTURB AS LITTLE OF THE SOIL UNDER FOOTING AS POSSIBLE. PROVIDE CONCRETE FILL UNDER FOOTINGS WHERE EXCAVATIONS WIDER THAN 18" ARE REQUIRED.

WHEN RUNNING DRAIN PIPING THROUGH A FOOTING, PROVIDE A STEEL PIPE SLEEVE WITH 2" THICK MINIMUM COMPRESSIBLE WRAP.

CONNECT TO DRAINS, FIXTURES, AND EQUIPMENT.

VENT FLASHING:
VENT PIPES PASSING THROUGH ROOF SHALL BE COVERED WITH SHEET LEAD WEIGHING NOT LESS THAN 4 POUNDS PER SQUARE FOOT. SAME TO BE WELL FLASHED ONTO THE ROOF, 12" AROUND PIPE. VENT PIPES TO EXTEND 12" ABOVE ROOF.

PIPE JOINTS:
INSTALL CAST IRON PIPE AND FITTINGS, HUBLESS PATTERN, AS RECOMMENDED BY CISPI IN THEIR PUBLICATION "INSTALLATION SUGGESTIONS FOR CAST IRON NO-HUB PIPE AND FITTINGS".

PREPARE PVC PIPE ENDS AS RECOMMENDED BY MANUFACTURER. USE A P-70 TYPE PRIMER (FOR PVC) AND A PVC SOLVENT CEMENT APPROPRIATE TO THE PIPE SIZE AND TEMPERATURE RANGE.

CLEANOUTS:
PROVIDE AND INSTALL CLEANOUTS AS SHOWN ON PLANS AND DEFINED BY CODE.

TRAPS:
PROVIDE TRAPS AT FIXTURES AND EQUIPMENT. TRAP SEALS SHALL BE STANDARD DEPTH, EXCEPT WHEN DEEP SEALS ARE REQUIRED BY CODE. TRAPS SHALL BE SET TRUE AND LEVEL AND LOCATED WITHIN THE LIMITS OF THE CODE REQUIREMENTS. A TRAP SHALL NOT BE USED AS A SEPARATOR, INTERCEPTOR OR OTHER TYPE OF DEVICE TO RETAIN SOLIDS. TRAPS ABOVE GRADE SHALL BE PROVIDED WITH SCREW-TYPE CLEANOUT PLUGS.

TRAPS SHALL BE PROTECTED DURING CONSTRUCTION AND SEALED TO PREVENT FOREIGN MATTER FROM ENTERING. PROVIDE ADJUSTABLE EXPANSION PLUG, PLASTIC CAP, OR EQUIVALENT.

WATER PIPING SYSTEM INSTALLATION
PIPING SHALL BE PITCHED TO DRAIN ENTIRE SYSTEM; INSTALL DRAIN VALVES AT LOW POINTS. PROVIDE UNIONS AT EQUIPMENT AND VALVES. PROVIDE OFFSETS AND TRANSITION FITTINGS.

NO WATER PIPING SHALL BE INSTALLED IN EXTERIOR WALLS, UNLESS ADEQUATELY PROTECTED FROM FREEZING. TWO INCH INSULATION SHALL BE INSTALLED ON BACK AND SIDES OF CHASE, FRONT SHALL BE OPEN TO ROOM HEAT, COVERED ONLY BY FINISHED WALL MATERIAL.

USE DIELECTRIC UNIONS FOR CONNECTING COPPER AND STEEL PIPING.

PROVIDE CROSS CONNECTION CONTROL DEVICES AS DEFINED BY CODE ON WATER CONNECTIONS TO EQUIPMENT SUBJECT TO CONTAMINATION OF THE WATER SUPPLY SYSTEM.

VALVE INSTALLATION:
VALVES WITH SCREWED ENDS SHALL BE INSTALLED USING "TEFLON" TAPE APPLIED ON MALE PORTION OF PIPING FITTING.

EACH INDIVIDUAL FIXTURE OR PIECE OF EQUIPMENT SHALL HAVE AN INDEPENDENT SHUT-OFF VALVE ADJACENT TO FIXTURE IN ADDITION TO THE REQUIRED BRANCH SHUT-OFF. WHERE VALVES ARE INSTALLED IN WALLS AN ACCESS PANEL SHALL BE PROVIDED.

BRANCHES:
VALVE SHUT-OFF FULL SIZE OF BRANCH FOR EACH BRANCH TAKE-OFF TO SUPPLY STACK OR FIXTURE GROUP.

DRAINS:
PROVIDE VALVED DRAINS AT LOW POINTS OF SYSTEMS. PIPING SHALL BE ARRANGED TO DRAIN THROUGH VALVED DRAINS.

FLUSHING MAINS AND BRANCH PIPING:
UPON COMPLETION OF THE WATER DISTRIBUTION SYSTEM, TEST VALVES TO INSURE THEIR FULL OPENING AND FLUSH OUT THE SYSTEM PROGRESSIVELY BY OPENING DRAIN VALVES AND BUILDING OUTLETS AND PERMITTING THE FLOW TO CONTINUE FROM EACH UNTIL THE WATER RUNS CLEAR.

STERILIZATION OF WATER DISTRIBUTION SYSTEM:
AS SOON AS THE WATER DISTRIBUTION SYSTEM HAS BEEN FLUSHED OUT, IT SHALL BE STERILIZED IN ACCORDANCE WITH THE REQUIREMENTS OF THE LOCAL HEALTH DEPARTMENT/WATER UTILITY. IN THE ABSENCE OF LOCAL REQUIREMENTS, USE THE FOLLOWING METHOD:

INTRODUCE CHLORINE OR A SOLUTION OF CALCIUM OR SODIUM HYPOCHLORITE, FILLING THE LINES SLOWLY AND APPLYING THE STERILIZING AGENT AT A RATE OF 50 PARTS PER MILLION OF CHLORINE, AS DETERMINED BY RESIDUAL CHLORINE TESTS AT THE ENDS OF THE LINES. OPEN AND CLOSE VALVES AND HYDRANTS WHILE THE SYSTEM IS BEING CHLORINATED.

AFTER THE STERILIZING AGENT HAS BEEN APPLIED FOR 24 HOURS, TEST FOR RESIDUAL CHLORINE AT THE ENDS OF THE LINES. IF LESS THAN 5 PPM, REPEAT THE STERILIZATION PROCESS.

WHEN TESTS SHOW AT LEAST 5 PPM OF RESIDUAL CHLORINE, FLUSH OUT THE SYSTEM UNTIL ALL TRACES OF THE CHEMICAL USED ARE REMOVED.

DORSCHNER ASSOCIATES
Architecture
Planning

Dorschner|Associates, Inc.
849 E. Washington Ave., Ste. 112
Madison, Wisconsin 53703

JDR ENGINEERING, INC.
5525 NOBEL DRIVE
SUITE 110
MADISON, WI 53711
ph:608.277.1728 fax:608.271.7046
JDR Project No. 140215

ISSUED

02.16.15 CONSTRUCTION DOCUMENTS

PROJECT
MONONA SCHLUTER PARK RESTROOMS
4500 WINNEQUAH ROAD
MONONA, WI 53716

PROJECT NO.
14013-00

DRAWING
PLUMBING SPECIFICATIONS

DATE
02.16.15

P002

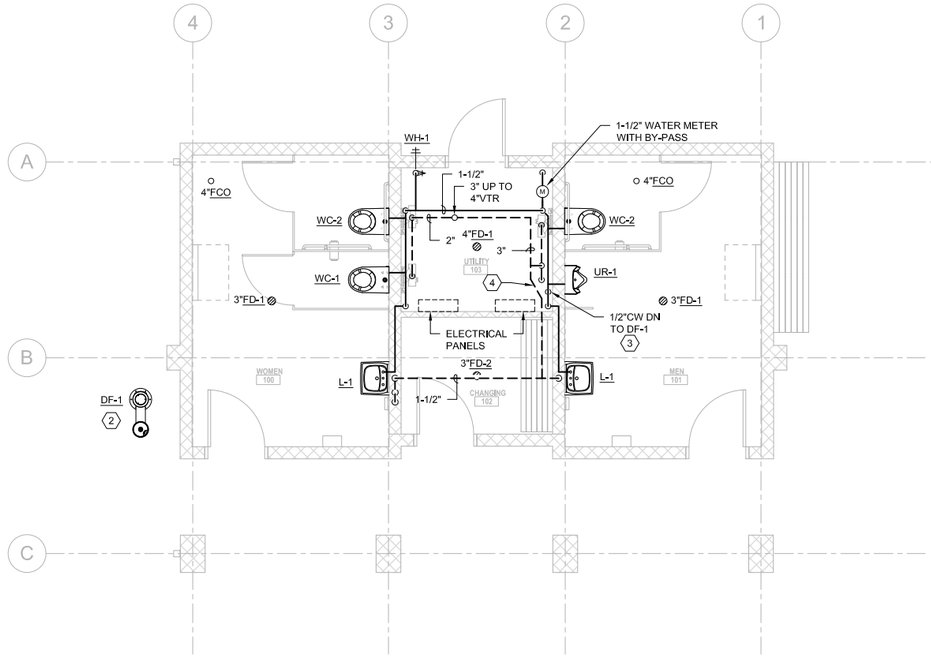

2 P101 PLUMBING FLOOR PLAN

SCALE: 1/8"=1'-0"

NORTH

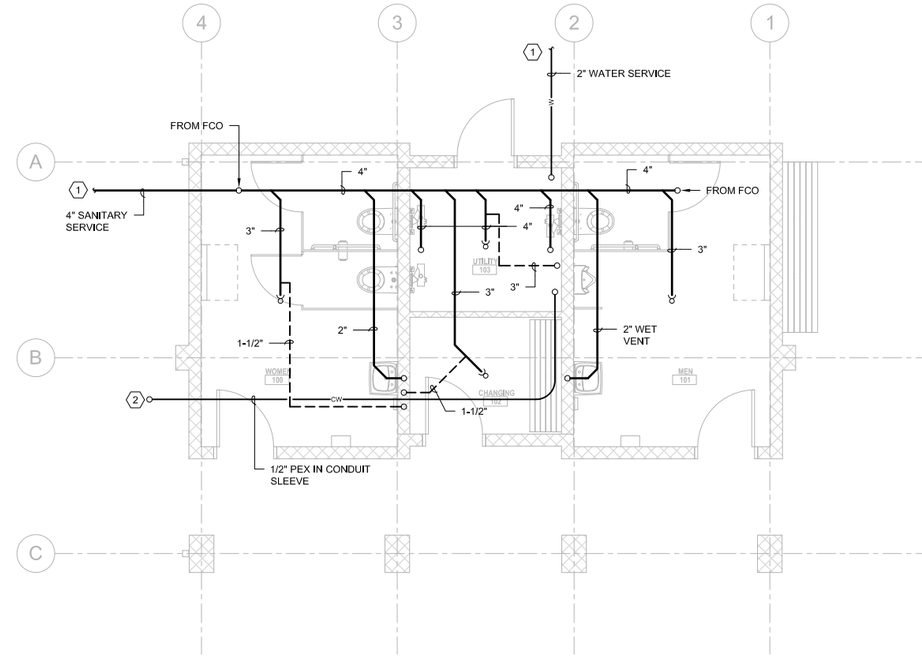

1 P101 PLUMBING UNDERFLOOR PLAN

SCALE: 1/8"=1'-0"

NORTH

GENERAL NOTES:

1. COORDINATE PIPE ROUTING INTO STORAGE ROOM WITH ALL UNDERGROUND ELECTRICAL CONDUIT.

KEYED NOTES:

1. ROUTE SERVICE TO 5'-0" FROM BUILDING AS SHOWN, CONTINUATION BY SITE UTILITY CONTRACTOR.
2. PC SHALL PROVIDE AND INSTALL DF-1 AND CONNECT TO 1/2" COLD WATER LINE. 1/2"CW SHALL BE 78" BFG MIN. DF-1 DRAIN PIPE SHALL DISCHARGE TO POROUS GRAVEL FILL 84" BFG. INSTALL 5 CU FT OF POROUS GRAVEL FILL UNDER VALVE BOX AND WASTE PIPE. COORDINATE EXACT LOCATION OF DF-1 WITH SITE UTILITY CONTRACTOR.
3. INSTALL BALL VALVE AND FEMALE QUICK CONNECTION FOR COMPRESSED AIR HOSE. UNDERGROUND PIPE SHALL BE CAPABLE OF BEING BLOWN OUT FOR SEASONAL MAINTENANCE.
4. OFFSET VENT PIPING AROUND ELECTRICAL PANELS.

DORSCHNER ASSOCIATES

Architecture
Planning

Dorschner|Associates, Inc.
849 E. Washington Ave., Ste. 112
Madison, Wisconsin 53703

JDR
ENGINEERING, INC.
5525 NOBEL DRIVE
SUITE 110
MADISON, WI 53711
ph:608.277.1728 fax:608.271.7046
JDR Project No. 140215

ISSUED

02.16.15 CONSTRUCTION DOCUMENTS

PROJECT
MONONA SCHLUTER PARK
RESTROOMS
4500 WINNEQUAH ROAD
MONONA, WI 53716

PROJECT NO.
14013-00

DRAWING
PLUMBING FLOOR PLANS

DATE
02.16.15

P101

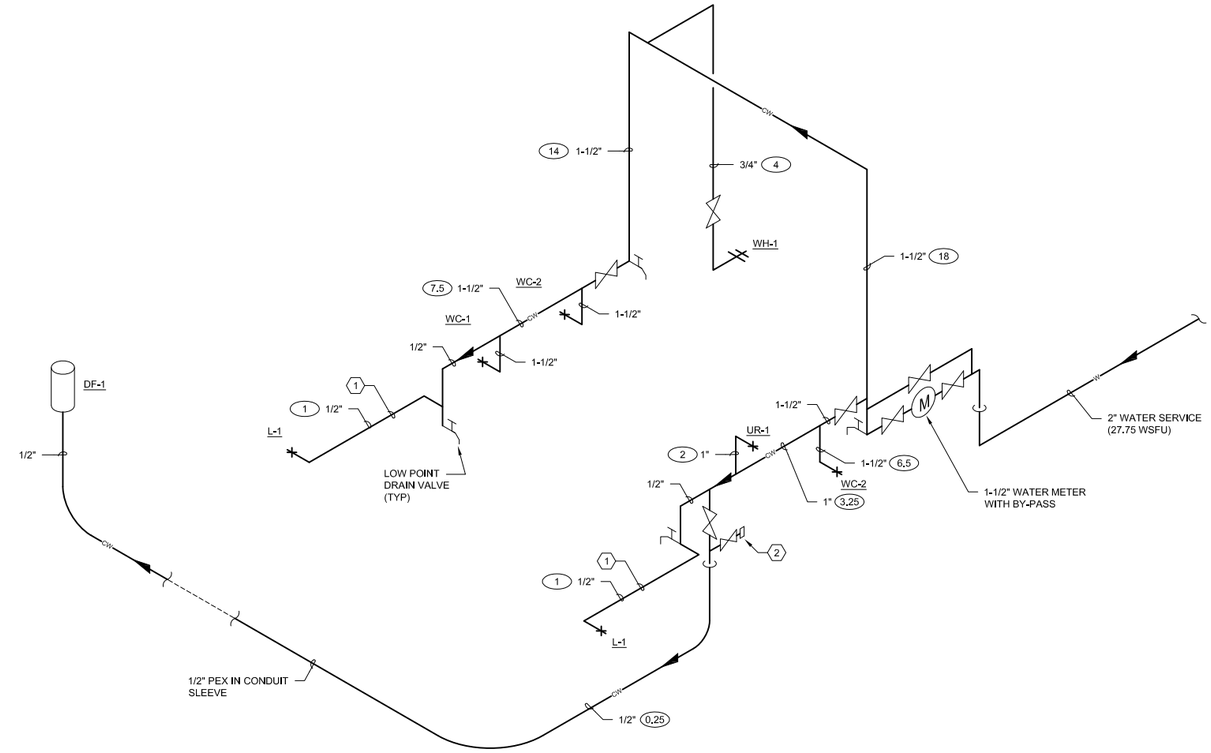

1 P102 DOMESTIC WATER RISER DIAGRAM - PLUMBING

SCALE: NONE

GENERAL NOTES:

1. PITCH ABOVE FLOOR WATER PIPING TO LOW POINT IN STORAGE ROOM AND INSTALL LOW POINT DRAINS AS REQUIRED. WATER PIPING SHALL BE DRAINED PRIOR TO FREEZING SEASONS.

KEYED NOTES:

1. PITCH PIPING IN WALL TO STORAGE ROOM AND INSTALL LOW POINT DRAIN.
2. INSTALL BALL VALVE AND FEMALE QUICK CONNECTION FOR COMPRESSED AIR HOSE. UNDERGROUND PIPE SHALL BE CAPABLE OF BEING BLOWN OUT FOR SEASONAL MAINTENANCE.

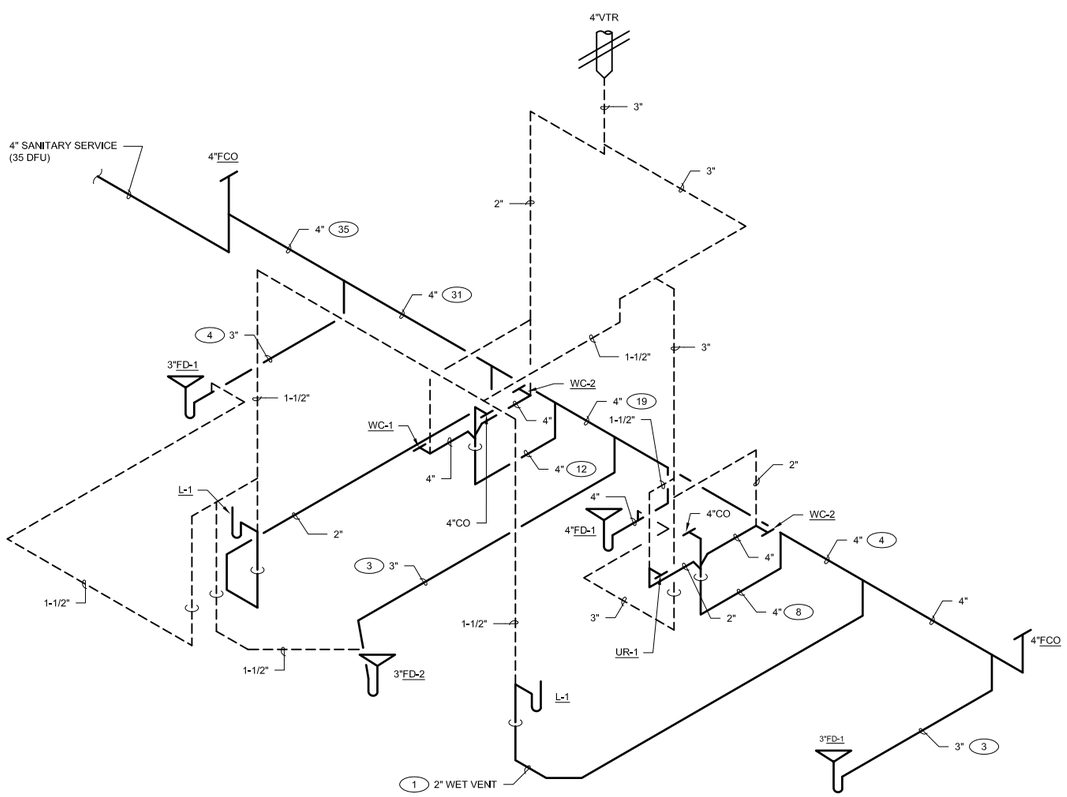

2 P102 WASTE AND VENT RISER DIAGRAM - PLUMBING

SCALE: NONE

DORSCHNER ASSOCIATES

Architecture
Planning

Dorschner|Associates, Inc.
849 E. Washington Ave., Ste. 112
Madison, Wisconsin 53703

JDR ENGINEERING, INC.
5525 NOBEL DRIVE
SUITE 110
MADISON, WI 53711
ph:608.277.1728 fax:608.271.7046
JDR Project No. 140215

ISSUED

02.16.15 CONSTRUCTION DOCUMENTS

PROJECT
MONONA SCHLUTER PARK RESTROOMS
4500 WINNEQUAH ROAD
MONONA, WI 53716

PROJECT NO.
14013-00

DRAWING
PLUMBING RISER DIAGRAMS

DATE
02.16.15

P102

GENERAL
ALL WORK AS SPECIFIED HEREIN SHALL BE PROVIDED BY THE HVAC CONTRACTOR.

OBTAIN AND PAY FOR ALL REQUIRED FEDERAL, STATE AND LOCAL INSTALLATION INSPECTIONS, CERTIFICATES AND PERMITS REQUIRED. DELIVER ORIGINALS OF THESE CERTIFICATES TO THE ARCHITECT OR CONSTRUCTION MANAGER.

WARRANTY
THE HVAC CONTRACTOR SHALL WARRANTY ALL WORK FOR A PERIOD OF (1) YEAR, EFFECTIVE ON THE DATE OF SUBSTANTIAL COMPLETION, AS DETERMINED BY THE OWNER, GENERAL CONTRACTOR AND HVAC CONTRACTOR.

PROJECT CLOSEOUT
THE CONTRACTOR SHALL COMPLETE AND PROVIDE ALL ITEMS AND MATERIALS, TRAINING, START-UP, ETC. ASSOCIATED WITH PROJECT CLOSEOUT. IN ADDITION TO THESE ITEMS, THE CONTRACTOR SHALL COMPLETE AND/OR PROVIDE THE FOLLOWING ITEMS PRIOR TO ACCEPTANCE OF THE INSTALLATION:

- FINAL AIR SYSTEM BALANCING.
- SUBMISSION OF OPERATING AND MAINTENANCE INSTRUCTIONS.
- OWNER TRAINING

OPERATION AND MAINTENANCE MANUALS
PROVIDE OPERATION AND MAINTENANCE MANUALS. MANUALS SHALL INCLUDE ALL APPROVED SHOP DRAWINGS, TEST REPORTS, CERTIFICATES OF COMPLIANCE AND EQUIPMENT MAINTENANCE MANUALS.

OWNER TRAINING
INSTRUCT OWNER PERSONNEL IN THE PROPER OPERATION AND MAINTENANCE OF SYSTEMS, CONTROLS AND EQUIPMENT PROVIDED AS PART OF THIS PROJECT, USING THE OPERATING AND MAINTENANCE MANUALS DURING THIS INSTRUCTION.

RECORD DRAWINGS
MAINTAIN RECORD DRAWINGS ON SYSTEM INSTALLATION. INCLUDE COPIES OF THESE RECORD DRAWINGS WITH THE OPERATING AND MAINTENANCE MANUALS.

COORDINATION OF WORK
COORDINATE ALL WORK WITH OTHER CONTRACTORS PRIOR TO INSTALLATION. ANY INSTALLED WORK THAT IS NOT COORDINATED AND THAT INTERFERES WITH OTHER CONTRACTOR'S WORK SHALL BE REMOVED OR RELOCATED AT THE INSTALLING CONTRACTOR'S EXPENSE.

COORDINATE THE LOCATION OF ALL BUILDING SURFACE PENETRATIONS WITH THE APPROPRIATE CONTRACTORS. FURNISH SLEEVES, INSERTS, AND OTHER DEVICES THAT ARE TO BE BUILT INTO THE STRUCTURE TO THE CONTRACTOR PERFORMING THAT WORK. PREPARE SHOP DRAWINGS FOR APPROVAL FOR ALL PENETRATIONS OF STRUCTURAL ELEMENTS, INCLUDING FLOOR SLABS, SHEAR WALLS, AND BEARING WALLS. DO NOT ALLOW PENETRATIONS TO BE MADE UNTIL SHOP DRAWINGS ARE APPROVED.

SURFACE COMPATIBILITY
VERIFY THAT ALL DEVICES ARE COMPATIBLE FOR THE SURFACES ON WHICH THEY WILL BE USED.

CUTTING AND PATCHING
THIS CONTRACTOR SHALL BE RESPONSIBLE FOR ALL CUTTING AND PATCHING OF THE EXISTING GENERAL CONSTRUCTION TO ACCOMMODATE INSTALLATION OF THE NEW HVAC SYSTEM(S) UNLESS OTHERWISE NOTED.

SHOP DRAWINGS
SUBMIT SHOP DRAWINGS FOR ALL EQUIPMENT TO THE GENERAL CONTRACTOR IN A TIMELY FASHION FOR REVIEW BY THE ARCHITECT/ENGINEER.

FANS
FURNISH COMPLETE WITH MOTORS, WHEELS, DRIVE ASSEMBLIES, BEARINGS, VIBRATION ISOLATION DEVICES, AND ACCESSORIES REQUIRED FOR SPECIFIED PERFORMANCE AND PROPER OPERATION.

ALL SINGLE PHASE MOTORS SHALL HAVE INHERENT THERMAL OVERLOAD PROTECTION.

STATICALLY AND DYNAMICALLY BALANCE ALL FANS SO THEY OPERATE WITHOUT OBJECTIONABLE NOISE OR VIBRATION.

INSTALL UNITS AS SHOWN ON THE DRAWINGS AND ACCORDING TO MANUFACTURER'S INSTALLATION INSTRUCTIONS.

PROVIDE FAN WITH VARIABLE SPEED CONTROLLER. VARIABLE SPEED CONTROLLER TO BE MOUNTED ON SIDE OF FAN FOR BALANCING PURPOSES.

DUCTWORK
CONSTRUCT ALL DUCTWORK TO BE FREE FROM VIBRATION, CHATTER, OBJECTIONABLE PULSATIONS AND LEAKAGE UNDER SPECIFIED OPERATING CONDITIONS.

USE MATERIAL, WEIGHT, THICKNESS, GAUGE, CONSTRUCTION AND INSTALLATION METHODS AS OUTLINED BY THE SMACNA HVAC DUCT CONSTRUCTION STANDARDS, METAL AND FLEXIBLE MANUAL.

ALL SHEET METAL USED FOR CONSTRUCTION OF DUCT SHALL BE 24 GAUGE OR HEAVIER EXCEPT FOR ROUND AND SPIRAL DUCTWORK AND SPIRAL DUCT TAKE-OFFS 12" AND BELOW MAY BE 26 GAUGE WHERE ALLOWED IN SMACNA HVAC DUCT CONSTRUCTION STANDARDS, METAL AND FLEXIBLE, 2ND EDITION, 1995.

DUCT SIZES INDICATED ON PLANS ARE NET INSIDE DIMENSIONS; WHERE DUCT LINER IS SPECIFIED, DIMENSIONS ARE NET, INSIDE OF LINER.

DUCT SYSTEM PRESSURE CLASSES SHALL BE 2".

MATERIALS
USE ASTM A525 OR ASTM A527 GALVANIZED STEEL SHEET OF LOCK FORMING QUALITY. GALVANIZED COATING TO BE 1.25 OUNCES PER SQUARE FOOT, BOTH SIDES OF SHEET, G90 IN ACCORDANCE WITH ASTM A90.

FABRICATE AND INSTALL DUCTWORK IN SIZES INDICATED ON THE DRAWINGS AND IN ACCORDANCE WITH SMACNA RECOMMENDATIONS, EXCEPT AS MODIFIED BELOW.

CONSTRUCT SO THAT ALL INTERIOR SURFACES ARE SMOOTH. USE RIVETED OR BOLTED CONSTRUCTION WHEN FABRICATING DUCTWORK. SHEET METAL SCREWS MAY BE USED ON DUCT HANGERS, TRANSVERSE JOINTS AND OTHER SMACNA APPROVED LOCATIONS IF THE SCREW DOES NOT EXTEND MORE THAN ½ INCH INTO THE DUCT.

USE ELBOWS AND TEES WITH A CENTER LINE RADIUS TO WIDTH OR DIAMETER RATIO OF 1.5 WHEREVER SPACE PERMITS. WHEN A SHORTER RADIUS MUST BE USED DUE TO LIMITED SPACE, INSTALL SINGLE WALL SHEET METAL TURNING VANES IN ACCORDANCE WITH THIS SPECIFICATION. SQUARE THROAT_RADIUS HEEL ELBOWS WILL NOT BE ACCEPTABLE.

PROVIDE EXPANDED TAKE_OFFS FOR BRANCH DUCT CONNECTIONS OR 45 DEGREE ENTRY FITTINGS.

INCREASE DUCT SIZES GRADUALLY, NOT EXCEEDING 15 DEGREES DIVERGENCE WHEREVER POSSIBLE. DIVERGENCE UPSTREAM OF EQUIPMENT SHALL NOT EXCEED 30 DEGREES; CONVERGENCE DOWNSTREAM SHALL NOT EXCEED 45 DEGREES.

VERIFY DIMENSIONS AT THE SITE, MAKING FIELD MEASUREMENTS AND DRAWINGS NECESSARY FOR FABRICATION AND ERECTION. CHECK PLANS SHOWING WORK OF OTHER TRADES AND CONSULT WITH ARCHITECT IN THE EVENT OF ANY INTERFERENCE.

LOCATE DUCTS WITH SUFFICIENT SPACE AROUND EQUIPMENT, INCLUDING ELECTRICAL PANELS TO ALLOW NORMAL OPERATING AND MAINTENANCE ACTIVITIES AND CODE REQUIRED CLEARANCES.

SEAL ALL LOW PRESSURE DUCTWORK IN ACCORDANCE WITH SMACNA SEAL CLASS "B"; ALL SEAMS, JOINTS, AND PENETRATIONS SHALL BE SEALED.

HANGERS MUST BE WRAPPED AROUND BOTTOM EDGE OF DUCT AND SECURELY FASTENED TO DUCT WITH SHEETMETAL SCREWS OR POP RIVETS. TRAPEZE HANGERS MAY BE USED AT CONTRACTOR'S OPTION.

PROTECT DUCTWORK AGAINST ENTRY OF FOREIGN MATTER DURING CONSTRUCTION. REMOVE ALL DIRT AND FOREIGN MATTER FROM THE ENTIRE DUCT SYSTEM AND CLEAN DIFFUSERS, REGISTERS AND GRILLES BEFORE OPERATING FANS.

DUCTWORK ACCESSORIES

MANUAL VOLUME DAMPERS
MANUFACTURERS: RUSKIN, VENT PRODUCTS, AIR BALANCE, OR APPROVED EQUAL.

DAMPERS MUST BE CONSTRUCTED IN ACCORDANCE WITH SMACNA FIG. 2 - 14, FIG. 2 - 15, AND NOTES RELATING TO THESE FIGURES, EXCEPT AS MODIFIED BELOW.

REINFORCE ALL BLADES TO PREVENT VIBRATION, FLUTTER, OR OTHER NOISE. USE RIVETS OR TACK WELDS TO SECURE INDIVIDUAL COMPONENTS; SHEET METAL SCREWS WILL NOT BE ACCEPTED. PROVIDE OPERATORS WITH LOCKING DEVICES AND DAMPER POSITION INDICATORS FOR EACH DAMPER; USE AN ELEVATED PLATFORM ON INSULATED DUCTS.

INSTALL MANUAL VOLUME DAMPERS IN EACH BRANCH DUCT AND FOR EACH GRILLE, REGISTER, OR DIFFUSER AS FAR AWAY FROM THE OUTLET AS POSSIBLE WHILE STILL MAINTAINING ACCESSIBILITY TO THE DAMPER.

ACCESS DOORS
MANUFACTURERS: SMACNA STANDARD ACCESS DOORS AS MANUFACTURED BY RUSKIN, AMERICAN WARMING AND VENTILATING, VENT PRODUCTS COMPANY INC., GREENHECK, ARROW OR APPROVED EQUAL.

CONSTRUCTION TO BE SUITABLE FOR THE PRESSURE CLASS OF THE DUCT IN WHICH THE DOOR IS TO BE INSTALLED. MATERIALS OF CONSTRUCTION TO BE IDENTICAL TO ADJACENT DUCTWORK. DOORS SHALL BE HINGED TYPE WITH SASH LOCK. GASKET ALL ACCESS DOORS.

INSTALL ACCESS DOORS WHERE SPECIFIED, INDICATED ON THE DRAWINGS, AND IN LOCATIONS WHERE MAINTENANCE, SERVICE, CLEANING OR INSPECTION IS REQUIRED.

ROOF HOODS (EXHAUST)
MANUFACURERS: GREENHECK, CARNES, COOK, LOUVERS AND DAMPERS, AMERICAN WARMING OR VENT PRODUCTS COMPANY INC. WEATHERPROOF INTAKE/EXHAUST HOODS.

STANDARD STYLE LOW SILHOUETTE HOOD CONSTRUCTED OF RIBBED ALUMINUM.

PROVIDE EACH HOOD WITH A 1/2 INCH GALVANIZED WIRE MESH BIRDSCREEN INSTALLED IN HOOD OPENING.

LOUVERS
ALL LOUVERS WILL BE PROVIDED BY THE GC.

FLASHINGS
FLASHING AND COUNTERFLASHING FOR ROOF CURBS SHALL BE PROVIDED BY THE GENERAL CONTRACTOR.

DUCT FLEXIBLE CONNECTIONS
MATERIAL TO BE FIRE RETARDANT, BE UL 214 LISTED, AND MEET THE REQUIREMENTS OF NFPA 90A.

CONNECTIONS TO BE A MINIMUM OF 3 INCHES WIDE, CRIMPED INTO METAL EDGING STRIP, AND AIR TIGHT.

USE COATED GLASS FIBER FABRIC FOR ALL APPLICATIONS. MATERIAL TO BE DOUBLE COATED WITH NEOPRENE, AIR AND WATER TIGHT, SUITABLE FOR TEMPERATURES BETWEEN - 10F AND 200F, AND HAVE A NOMINAL WEIGHT OF 30 OUNCES PER SQUARE YARD.

INSTALL AT ALL DUCT CONNECTIONS TO EXHAUST FAN IN ACCORDANCE WITH SMACNA FIGURE 2_19.

AIR GRILLES AND REGISTERS
MANUFACTURERS: CARNES, KRUEGER, METALAIRE, TITUS, PRICE OR APPROVED EQUAL.

ALL GRILLES, REGISTERS AND DIFFUSERS SHALL BE PROVIDED WITH THE APPROPRIATE FRAMES SUITABLE FOR THE CEILING TYPES. COORDINATE CEILING TYPES WITH OTHER TRADES.

PROVIDE GRILLES, REGISTERS AND DIFFUSERS AS SCHEDULED ON THE PLANS.

COORDINATE EXACT LOCATIONS OF GRILLES AND REGISTERS WITH OTHER TRADES TO MINIMIZE INTERFERENCES.

PAINT DUCTWORK VISIBLE BEHIND AIR OUTLETS AND INLETS FLAT BLACK WITH FLAT BLACK ENAMEL SPRAY PAINT.

DORSCHNER ASSOCIATES
Architecture
Planning

Dorschner|Associates, Inc.
849 E. Washington Ave., Ste. 112
Madison, Wisconsin 53703

JDR
ENGINEERING, INC.
5525 NOBEL DRIVE
SUITE 110
MADISON, WI 53711
ph:608.277.1728 fax:608.271.7046
JDR Project No. 140215

ISSUED

02.16.15 CONSTRUCTION DOCUMENTS

PROJECT
MONONA SCHLUTER PARK RESTROOMS
4500 WINNEQUAH ROAD
MONONA, WI 53716

PROJECT NO.
14013-00

DRAWING
HVAC SPECIFICATIONS

DATE
02.16.15

M100

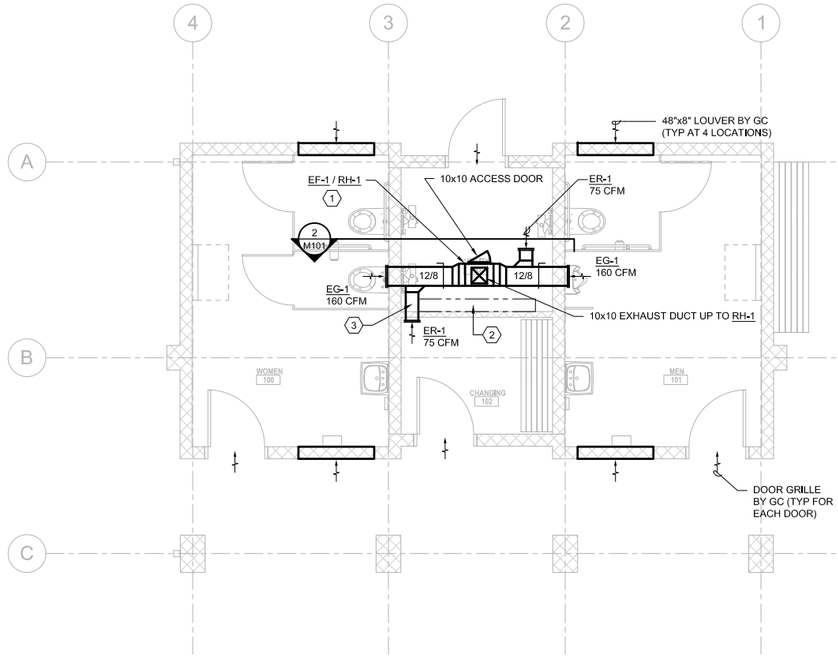

1 M101 FLOOR PLAN - HVAC

SCALE: 1/8"=1'-0"

NORTH

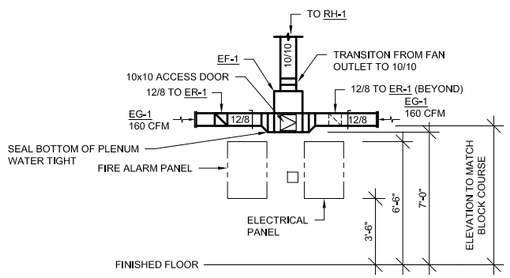

2 M101 SECTION

SCALE: 1/8"=1'-0"

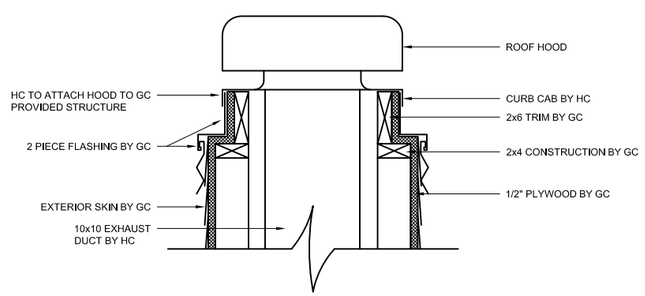

3 M101 ROOF HOOD DETAIL

SCALE: NONE

AIR DEVICE SCHEDULE

EG-1 — UNIT NUMBER
300 — CFM

SG = SUPPLY GRILLE
EG = EXHAUST GRILLE
CD = CEILING DIFFUSER (SUPPLY)
TG = TRANSFER GRILLE

UNIT NO.	EG-1	ER-1	
SERVICE	EXHAUST	EXHAUST	
FACE STYLE	LOUVERED	LOUVERED	
PATTERN	45° & 3/4" SPACE	45° & 3/4" SPACE	
FINISH	SEE NOTE	SEE NOTE	
MATERIAL	ALUMINUM	ALUMINUM	
SIZE (FACE/NECK)	18x10 / 16x8	10x10 / 8x8	
MOUNTING	SURFACE	SURFACE	
DAMPER	NO	YES	
REMARKS	1	1	

GENERAL NOTES:

1. CONTRACTOR SHALL VERIFY MOUNTING SURFACE / FRAME REQUIREMENTS.
2. BRANCH DUCT SIZE TO DIFFUSER SHALL BE THE NECK SIZE OF THE DIFFUSER UNLESS NOTED OTHERWISE.
3. SEE SPECIFICATION FOR GRILLE, REGISTER, AND DIFFUSER FINISHES.
4. MAXIMUM STATIC PRESSURE DROP THROUGH GRILLE, REGISTER, OR DIFFUSER SHALL NOT EXCEED 0.1".
5. MAXIMUM NC LEVELS FOR GRILLES, REGISTERS, OR DIFFUSERS SHALL NOT EXCEED 30.

KEYED NOTES (AIR DEVICE SCHEDULE):

1. PROVIDE IN STANDARD FINISH SELECTED BY ARCHTECT.

GENERAL NOTES (1/M101):

1. ALL DUCTWORK IN UTILITY ROOM 103 SHALL BE COORDINATED WITH OTHER TRADES PRIOR TO FABRICATION OR INSTALLATION.

KEYED NOTES (1/M101):

1. MOUNT EXHAUST FAN IN VERTICAL POSITION AS LOW AS POSSIBLE. PROVIDE VIBRATION ISOLATION FOR FAN MOUNTING. PROVIDE PLENUM ON FAN INLET AND FLEXIBLE DUCT CONNECTION BETWEEN EXHAUST FAN AND DUCTWORK UPSTREAM OF FAN.

   TRANSITION FROM FAN OUTLET AND RISE VERTICALLY (10x10 DUCT) TO RH-1 LOCATED ON ROOF.

2. LOCATION OF ELECTRICAL AND FIRE ALARM PANELS. NO EQUIPMENT OR DUCTWORK OVER TOP OF PANELS. MAINTAIN ALL CODE REQUIRED CLEARANCES.
3. DUCT SHALL NOT RUN DIRECTLY OVER TOP OF ANY ELECTRICAL PANEL.

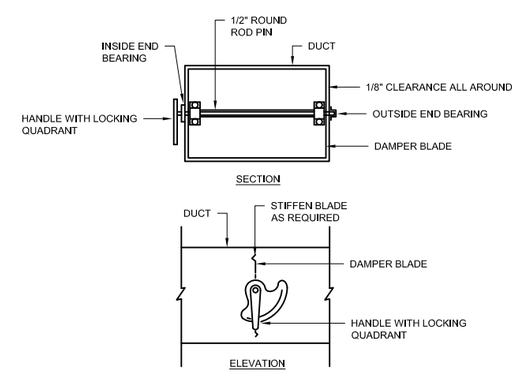

4 M101 VOLUME DAMPER DETAIL

SCALE: NONE

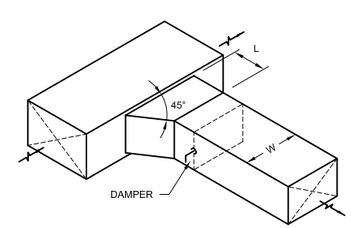

NOTE: L = 1/4W (4" MINIMUM)

5 M101 BRANCH DUCT TAKEOFF

SCALE: NONE

(REVERSE FLOW ARROWS FOR EXHAUST AND RETURN)

ROOF HOOD SCHEDULE

UNIT NO.	RH-1			
SERVICE	EF-1 - EXHAUST			
LOCATION	ROOF			
MANUFACTURER	GREENHECK			
MODEL NO.	GRSR			
CFM	470			
NECK SIZE (IN)	10"Ø			
CURB HEIGHT (IN)	-			
FREE AREA VELOCITY (FPM)	825			
FREE AREA (FT²)	0.57			
MOTORIZED AUTO DAMPERS	NO			
INTAKE				
EXHAUST	●			
RELIEF				
REMARKS	1			

KEYED NOTES:

1. PROVIDE UNIT WITH BUILT IN CURB CAP AND PREPUNCHED MOUNTING MOUNTING HOLES.

FAN SCHEDULE

UNIT NO.	EF-1	
LOCATION	103 - UTILITY RM	
MANUFACTURER	GREENHECK	
MODEL NO.	CSP-A710	
SERVICE	EXHAUST	
FAN TYPE	CABINET	
ARRANGEMENT	INLINE	
DESIGN CFM	470	
EXT. SP (IN WC)	0.50	
FAN WHEEL TYPE	-	
FAN DIAMETER	-	
APPROXIMATE FAN RPM	1080	
MOTOR (WATTS)	325	
MOTOR HP	FRAC	
VOLTS/PHASE	120 / 1	
DRIVE	DIRECT	
TWO SPEED	NO	
VFD	NO	
MAX. SONES	2.0	
REMARKS	1 2	

KEYED NOTES:

1. PROVIDE SPEED CONTROLLER FOR FAN. TURN FAN SPEED CONTROLLER OVER TO ELECTRICAL CONTRACTOR (EC). EC TO MOUNT SPEED CONTROLLER DIRECTLY ON SIDE OF FAN HOUSING. SPEED CONTROLLER TO BE USED FOR FAN BALANCING.
2. FAN SHALL BE CONTROLLED VIA LIGHTING OCCUPANCY SENSOR. UPON A SIGNAL FROM ANY OCCUPANCY SENSOR (ROOMS 100-WOMEN, 101-MEN OR 102-CHANGING), THE FAN SHALL OPERATE. UPON EXPIRATION OF THE OCCUPANCY SENSOR, THE FAN SHALL TURN OFF. THE EC WILL PROVIDE AND INSTALL ALL OCCUPANCY CONTROL WIRING, RELAYS, SENSORS, ETC FOR FAN OPERATION.

DORSCHNER ASSOCIATES

Architecture
Planning

Dorschner|Associates, Inc.
849 E. Washington Ave., Ste. 112
Madison, Wisconsin 53703

JDR ENGINEERING, INC.
5525 NOBEL DRIVE
SUITE 110
MADISON, WI 53711
ph:608.277.1728 fax:608.271.7046
JDR Project No. 140215

ISSUED

02.16.15 CONSTRUCTION DOCUMENTS

PROJECT
MONONA SCHLUTER PARK RESTROOMS
4500 WINNEQUAH ROAD
MONONA, WI 53716

PROJECT NO.
14013-00

DRAWING
HVAC FLOOR PLAN, DETAILS AND SCHEDULES

DATE
02.16.15

M101

GENERAL
ALL WORK AS SPECIFIED HEREIN SHALL BE PROVIDED BY THE HVAC CONTRACTOR.

OBTAIN AND PAY FOR ALL REQUIRED FEDERAL, STATE AND LOCAL INSTALLATION INSPECTIONS, CERTIFICATES AND PERMITS REQUIRED. DELIVER ORIGINALS OF THESE CERTIFICATES TO THE ARCHITECT OR CONSTRUCTION MANAGER.

WARRANTY
THE HVAC CONTRACTOR SHALL WARRANTY ALL WORK FOR A PERIOD OF (1) YEAR, EFFECTIVE ON THE DATE OF SUBSTANTIAL COMPLETION, AS DETERMINED BY THE OWNER, GENERAL CONTRACTOR AND HVAC CONTRACTOR.

PROJECT CLOSEOUT
THE CONTRACTOR SHALL COMPLETE AND PROVIDE ALL ITEMS AND MATERIALS, TRAINING, START-UP, ETC. ASSOCIATED WITH PROJECT CLOSEOUT. IN ADDITION TO THESE ITEMS, THE CONTRACTOR SHALL COMPLETE AND/OR PROVIDE THE FOLLOWING ITEMS PRIOR TO ACCEPTANCE OF THE INSTALLATION:

- FINAL AIR SYSTEM BALANCING.
- SUBMISSION OF OPERATING AND MAINTENANCE INSTRUCTIONS.
- OWNER TRAINING

OPERATION AND MAINTENANCE MANUALS
PROVIDE OPERATION AND MAINTENANCE MANUALS. MANUALS SHALL INCLUDE ALL APPROVED SHOP DRAWINGS, TEST REPORTS, CERTIFICATES OF COMPLIANCE AND EQUIPMENT MAINTENANCE MANUALS.

OWNER TRAINING
INSTRUCT OWNER PERSONNEL IN THE PROPER OPERATION AND MAINTENANCE OF SYSTEMS, CONTROLS AND EQUIPMENT PROVIDED AS PART OF THIS PROJECT, USING THE OPERATING AND MAINTENANCE MANUALS DURING THIS INSTRUCTION.

RECORD DRAWINGS
MAINTAIN RECORD DRAWINGS ON SYSTEM INSTALLATION. INCLUDE COPIES OF THESE RECORD DRAWINGS WITH THE OPERATING AND MAINTENANCE MANUALS.

SCOPE
APPLICABLE REQUIREMENTS OF THE GENERAL CONDITIONS OF THE CONTRACT SHALL APPLY TO THE SCOPE OF WORK SPECIFIED IN THIS DIVISION OF WORK.

GENERAL REQUIREMENTS
THIS SPECIFICATION FOR THE ELECTRICAL WORK IS INTENDED TO ESTABLISH A DESIGN CRITERIA FOR THE ELECTRICAL PORTION OF THE PROJECT. THIS ELECTRICAL CONTRACTOR SHALL ASSUME FULL RESPONSIBILITY FOR THE LAYOUT AND CONSTRUCTION TO MEET THE REQUIREMENTS OF THE OWNER, ARCHITECT, STATE, LOCAL CODES AND ELECTRICAL INDUSTRY STANDARDS.

THESE SPECIFICATIONS ARE INTENDED TO COVER A COMPLETE INSTALLATION OF EQUIPMENT AND SYSTEMS. THE OMISSION OF EXPRESSED REFERENCE TO ANY MATERIAL OR LABOR NECESSARY FOR THE PROPER EXECUTION OF THE SPECIFIED WORK SHALL NOT RELIEVE THE CONTRACTOR FROM PROVIDING SUCH ADDITIONAL LABOR AND MATERIALS.

THIS CONTRACTOR SHALL CHECK THE DRAWINGS AND SPECIFICATIONS PERTAINING TO HEATING, VENTILATING, AIR CONDITIONING, AND PLUMBING EQUIPMENT AND SHALL INCLUDE ALL WORK INDICATED TO BE PERFORMED BY THE ELECTRICAL CONTRACTOR. SPECIFICATIONS SHALL BE REFERENCED FOR EACH PIECE OF MOTORIZED EQUIPMENT.

THIS CONTRACTOR SHALL REFER TO THE SPECIFICATIONS FOR ALL SPECIAL EQUIPMENT ASSOCIATED WITH AND FURNISHED UNDER THE GENERAL CONTRACT AND EQUIPMENT FURNISHED BY OWNER. FURTHERMORE THIS CONTRACTOR SHALL INCLUDE ALL ELECTRICAL WORK ASSOCIATED WITH THE INSTALLATION OF THIS EQUIPMENT.

COMPLY WITH ALL NATIONAL, STATE AND LOCAL ELECTRICAL CODES, LAWS, ORDINANCES AND REGULATIONS.

COMPLY WITH ALL APPLICABLE OSHA REGULATIONS.

SECURE PERMITS, PLAN REVIEW AND LICENSES APPLICABLE TO THIS SECTION OF THE WORK. PAY ALL FEES INCIDENTAL THERETO.

THIS CONTRACTOR SHALL PROVIDE INFORMATION TO ALL OTHER DIVISIONS OF THIS PROJECT FOR COORDINATION PURPOSES IN A TIMELY MANNER.

THIS CONTRACTOR SHALL IDENTIFY COST SAVING OPTIONS AND ALTERNATIVES AS APPLICABLE TO THIS PROJECT FOR ITEMS SUCH AS EQUIPMENT MANUFACTURERS, CONTROL SYSTEMS, ETC.

PROVIDE TEMPORARY LIGHTING AND POWER IN ALL AREAS AS REQUIRED.

ELECTRICAL SYSTEM CRITERIA
ELECTRICAL SERVICE:

THE BUILDING ELECTRICAL SERVICE SHALL BE COORDINATED WITH MG&E. COORDINATE ALL REQUIREMENTS AND INCLUDE ALL COSTS IN BID.

DESCRIPTION OF ELECTRICAL SYSTEMS
PROVIDE AND TERMINATE THE ELECTRICAL SERVICE TO BRANCH CIRCUIT PANELS. PROVIDE SUFFICIENT SPACE IN PANEL FOR CIRCUIT BREAKERS TO SERVE KITCHEN EQUIPMENT, BUILDING EQUIPMENT, AND PANELS AS INDICATED ON THE DRAWINGS, AS WELL AS SUFFICIENT SPARE SPACE.

PROVIDE COMPLETE INSTALLATION REQUIRED FOR ALL LIGHTING AND RECEPTACLES INDICATED ON THE DRAWINGS.

PROVIDE ELECTRICAL CONNECTIONS TO ELECTRIFIED PLUMBING AND HVAC EQUIPMENT.

PROVIDE A COMPLETE FIRE ALARM SYSTEM AS REQUIRED BY LOCAL AUTHORITY HAVING JURISDICTION AND AS REQUIRED BY STATE AND LOCAL CODES AND REGULATIONS. PREPARE AND SUBMIT APPROVAL DRAWINGS NECESSARY, INCLUDING REVIEW FEES.

THE ELECTRICAL CONTRACTOR SHALL BE RESPONSIBLE FOR PROVIDING ALL ACCEPTANCE TESTING FOR ELECTRICAL EQUIPMENT AND WIRING INSTALLED UNDER THIS CONTRACT.

RELATED WORK BY OTHERS
THIS CONTRACTOR SHALL CHECK ALL OTHER DIVISIONS OF WORK AND COORDINATE THE ACTUAL LAYOUT OF HIS WORK WITH THE OTHER DIVISIONS. MAKE ALL ADJUSTMENTS AS NECESSARY TO COMPLETE THE PROJECT.

THIS CONTRACTOR SHALL REFER TO THE SPECIFICATIONS FOR ALL SPECIAL EQUIPMENT ASSOCIATED WITH AND FURNISHED UNDER THE GENERAL CONTRACT. FURTHERMORE THIS CONTRACTOR SHALL INCLUDE ALL ELECTRICAL WORK ASSOCIATED WITH THE INSTALLATION OF THIS EQUIPMENT.

ALL WIRING DEVICES SHALL BE SPECIFICATION GRADE.

PRODUCTS

METER SOCKET
SELF CONTAINED NEMA 3R ENCLOSURE, UL LISTED. CONFIRM EXACT REQUIRMENTS AND SHORT CIRCUIT RATING WITH UTILITY PROVIDER.

PANELBOARDS
ALL PANELBOARDS SHALL BE SQUARE D #NQOD SERIES OR EQUIVALENT. BOLT-ON CIRCUIT BREAKER TYPE WITH COPPER BUSS.

COVER PLATES
ALL SWITCHES, RECEPTACLES AND OUTLETS SHALL BE COMPLETED WITH TYPE 302 BRUSHED STAINLESS STEEL COVER PLATES FOR FLUSH DEVICES, GALVANIZED STEEL COVER PLATES IN UNFINISHED SPACES FOR SURFACE MOUNTED BOXES.

RECEPTACLES
HEAVY DUTY SPECIFICATION GRADE TYPE NEMA 5-20R. COLOR AS SELECTED BY THE ARCHITECT. WEATHER PROOF COVER PLATE, NEMA 3R RATED WHILE IN USE, CLEAR NON-LOCKING STANDARD DEPTH, VERTICAL MOUNT, UL LISTED.

SWITCHES
SWITCHES SHALL BE HEAVY DUTY SPECIFICATION GRADE GENERAL TYPE 20A, 12-277 VOLT. COLOR SELECTED BY ARCHITECT.

OCCUPANCY SENSORS
WALL MOUNTED FROM SWIVEL BRACKET DUAL TECHNOLOGY PASSIVE INFRARED/MICROPHONIES, EITHER TECHNOLOGY MAINTAIN ON STATUS, WIDE VIEW LENS, 180 DEGREE COVERAGE PATTERN, ADJUSTABLE SENSITIVITY AND TIME DELAY, INHIBIT PHOTOCELL PREVENTS LIGHTS FROM TURNING ON IF ADEQUATE DAYLIGHT IS AVAILABLE. MINIMUM 5 YEAR WARRANTY AND UL LISTED.

FIRE ALARM SYSTEM
FIRE ALARM CONTROL PANEL, NON-CODED 2-ZONE, CONVENTIONAL PANEL, MICORPROCESSOR TECHNOLOGY, TWO STYLE B (CLASS B) INITIATING DEVICES, ONE STYLE Y. CLASS B NAC, 24 VDC, 120 VAC, DUAL-LINE DIGITAL ALARM. COMMUNICATOR/TRANSMITTERS, BATTERIES SURFACE MOUNTED. ACCEPTABLE MANUFACTURERS: NOTIFIER SFP-2402, SIMPLEX 4005, SIEMNS SXL, EDMONDS E-FSC SERIES, FIRE-LITE.

HEAT DETECTOR, COMBINATION RATE OF RISE AND 135° F FIXED TEMPERATURE, 2-WIRE OPERATION, 24 VDC, 2 PIECE DESIGN, MULTI-FUNCTION LED INDICATOR.

FIRE ALARM AUDIO/VISUAL NOTIFICATION APPLIANCE, ELECTRONIC HORN WITH SELECTABLE CONTINUOUS OR TEMPORAL TONE AND HIGH-INTENSITY STROBE, RED HOUSING WITH WHITE LETTERS OR PICTOGRAM. SEMI-FLUSH WALL MOUNTED 24 VDC.

ALL FIRE ALARM SYSTEMS MUST BE COORDINATED WITH AND APPROVED BY THE LOCAL AUTHORITY HAVING JURISDICATION.

TIME CLOCK
TIME SWITCH, 7 DAY ASTRONOMIC, 1 CHANNEL ELECTRONIC, ONE (1) SPDT 5 AMP CONTACT, LCD DISPLAY, 12 OR 24 HOUR FORMAT, MINIMUM 100 HOUR CARRY-OVER, UL LISTED. ACCEPTABLE MANUFACTURERS INCLUDE PARAGON (EC71ST), TORK (DWZ100A), INTERMATIC (ET70115C) OR EQUAL. MOUNT 60" AFF.

SYMBOLS LIST:

MOUNTING HEIGHTS FOR DEVICES AND EQUIPMENT TO BE MEASURED FROM FINISHED FLOOR TO CENTERLINE OF DEVICE.

LIGHTING:

- FLUORESCENT WALL MOUNTED FIXTURE
- FLUORESCENT STRIP LIGHT
- LIGHTING FIXTURE - WALL SURFACE
- EMERGENCY BATTERY POWER SPOT ILLUMINATION UNIT - DUAL HEAD LIGHT - WALL MOUNT 12" BELOW CEILING UNLESS NOTED OTHERWISE.
- SINGLE POLE SWITCH - TOGGLE TYPE - MOUNT AT 44" AFF, UNLESS NOTED OTHERWISE
  - a — SWITCH DESIGNATION
- LIGHTING CONTROL OCCUPANCY SENSOR. WALL MOUNTED AT 44" AFF UNLESS NOTED OTHERWISE.
- TIME CLOCK
- DIMMER SWITCH - SUITABLE FOR DIMMING LED LIGHTING SHOWN

POWER:

- DUPLEX RECEPTACLE - MOUNTED 18" AFF UNLESS NOTED OTHERWISE
  - 3 — CIRCUIT NUMBER (SEE PLAN FOR PANEL BOUNDARIES) - TYPICAL RECEPTACLE TYPE OR EQUIPMENT SERVED.
- DUPLEX RECEPTACLE - MOUNTED 4" ABOVE COUNTERTOP OR COUNTER BACKSPLASH WHERE PRESENT. SEE PLANS FOR EXACT OUTLET TYPE.
- GROUND FAULT INTERRUPTING DUPLEX RECEPTACLE - MOUNTED AT 18" AFF UNLESS NOTED OTHERWISE.
- EQUIPMENT CONNECTION
- JUNCTION BOX

SYSTEMS:

- 15 — FIRE ALARM AUDIO/VISUAL SIGNALLING DEVICE - MOUNT 6" BELOW CEILING OR AT 6'-8" AFF, WHICHEVER IS LOWER.
  - INDICATES CANDELA INTENSITY
- H — HEAT DETECTOR

DORSCHNER ASSOCIATES

Architecture
Planning

Dorschner|Associates, Inc.
849 E. Washington Ave., Ste. 112
Madison, Wisconsin 53703

JDR ENGINEERING, INC.
5525 NOBEL DRIVE
SUITE 110
MADISON, WI 53711
ph:608.277.1728 fax:608.271.7046
JDR Project No. 140215

ISSUED

02.16.15 CONSTRUCTION DOCUMENTS

PROJECT
MONONA SCHLUTER PARK RESTROOMS
4500 WINNEQUAH ROAD
MONONA, WI 53716

PROJECT NO.
14013-00

DRAWING
ELECTRICAL SYMBOLS & SPECIFICATIONS

DATE
02.16.15

E100

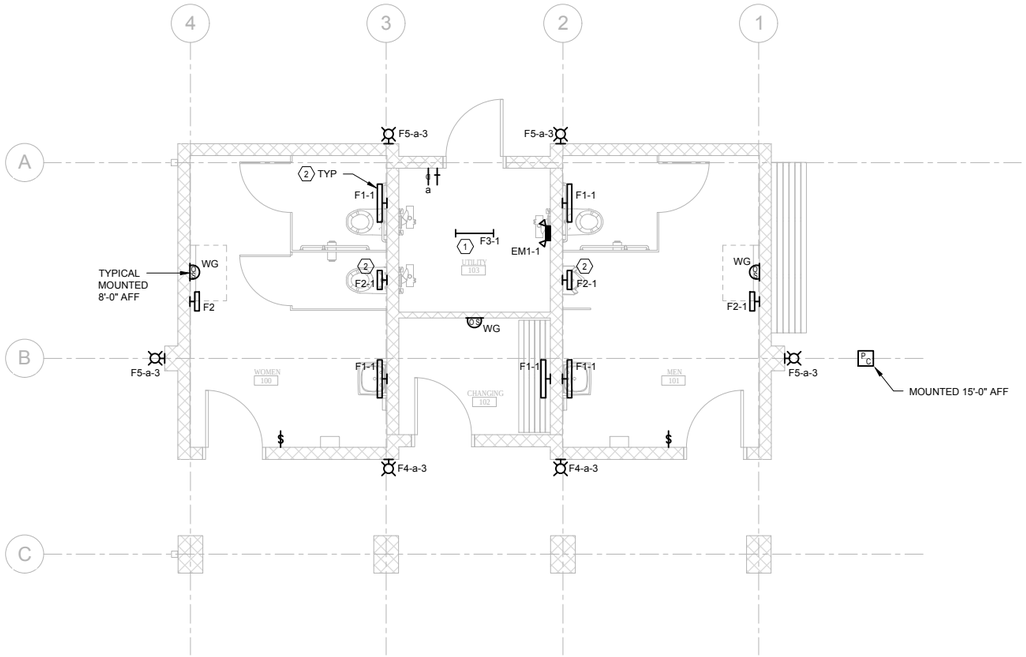

1 E101 FLOOR PLAN - LIGHTING

SCALE: 1/8"=1'-0"

NORTH

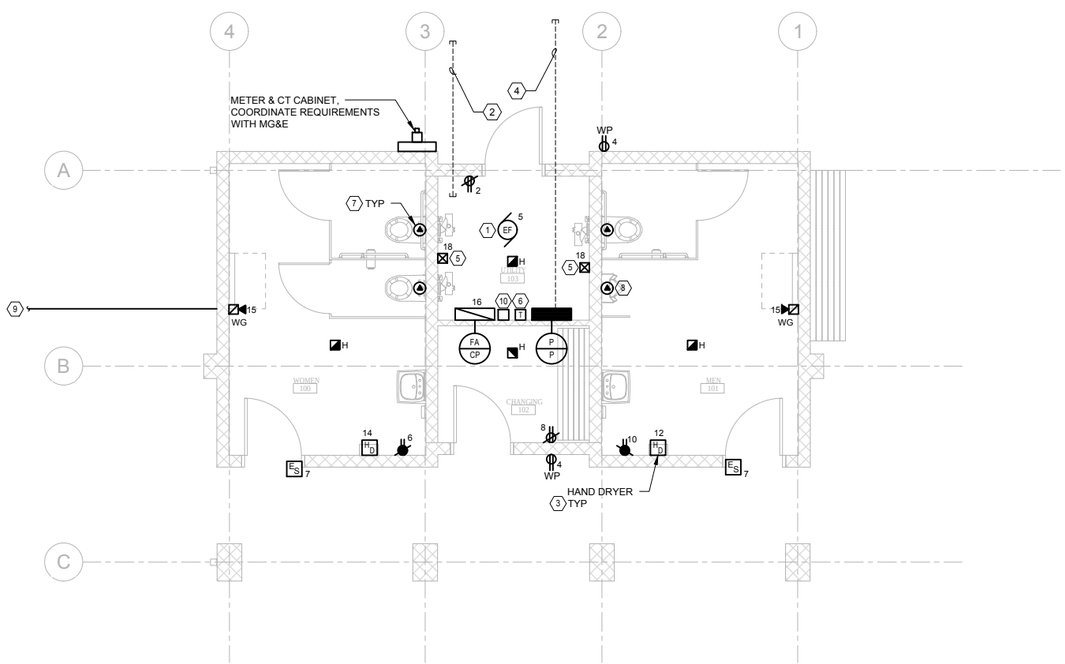

2 E101 FLOOR PLAN - POWER/SYSTEMS

SCALE: 1/8"=1'-0"

NORTH

GENERAL LIGHTING NOTES:

1. REFER TO DRAWING E100 FOR SYMBOLS AND ABBREVIATIONS.
2. ALL LIGHTING SHALL BE SERVED FROM PANEL "PP".
3. ALL CONDUIT SHALL BE CONCEALED IN WALLS AND SURFACE MOUNTED TO WOOD BEAM AT 9'-2" AFF IN FINISHED SPACES. UTILITY ROOM 103 CONDUIT MAY BE RUN EXPOSED.

KEYED LIGHTING NOTES:

1. CHAIN MOUNTED 8'-0" AFF FROM STRUCTURE.
2. REFER TO ARCHITECTURAL ELEVATION FOR MOUNTING LOCATION AND HEIGHT.

GENERAL POWER/SYSTEM NOTES:

1. REFER TO DRAWING E100 FOR SYMBOLS AND ABBREVIATIONS.
2. ALL LIGHTING SHALL BE SERVED FROM PANEL "PP".
3. ALL CONDUIT SHALL BE CONCEALED IN WALLS AND SURFACE MOUNTED TO WOOD BEAM AT 9'-2" AFF IN FINISHED SPACES. UTILITY ROOM 103 CONDUIT MAY BE RUN EXPOSED.

KEYED POWER/SYSTEM NOTES:

1. EC TO INSTALL AND WIRE SPEED CONTROLLER, PROVIDED BY MECHANICAL CONTRACTOR. MOUNT SPEED CONTROLLER ON SIDE OF EXHAUST FAN. PROVIDE AND INSTALL DISCONNECT SWITCH AND FINAL CONNECTION TO NEW EXHAUST FAN EF-1. FAN SHALL BE CONTROLLED BY EACH OF THE THREE OCCUPANCY SENSORS LOCATED IN WOMEN #100, MEN #101, AND CHANGING #102.
2. EC SHALL PROVIDE A 2" EMPTY PVC SCH 40 CONDUIT UNDERGROUND BEYOND BUILDING PAVEMENT 8'-0" FROM UTILITY 103. STUB CONDUIT IN ROOM 3" AFF. LABEL AS TELEPHONE.
3. MOUNTED AT 42" AFF. REFER TO ARCHITECTURAL ELEVATIONS FOR DETAILS.
4. EC SHALL EXTEND ONE (1) 2" EMPTY CONDUIT UNDERGROUND FROM METER SOCKET BEYOND BUILDING PAVEMENT 8'-0" FOR MG&E SERVICE CONDUCTORS. COORDINATE REQUIREMENTS WITH MG&E.
5. ELECTRONIC FLUSH VALVE TRANSFORMER. COORDINATE REQUIREMENTS AND LOCATION WITH PLUMBING CONTRACTOR.
6. EXTEND 2#12 AND 1#12 GND IN 3/4" C TO TS/1.
7. ELECTRONIC FLUSH VALVE FOR WATER CLOSET. EC SHALL COORDINATE ROUGH-IN WITH PLUMBING CONTRACTOR FOR HARDWIRED CONNECTION.
8. ELECTRONIC URINAL FLUSH VALVE. EC SHALL COORDINATE ROUGH-IN WITH PLUMBING CONTRACTOR FOR HARDWIRED CONNECTION.
9. PROVIDE A 1" CONDUIT UNDER SLAB FOR FUTURE B-CYCLE VENDOR.
10. POWER SUPPLY FOR DOOR STRIKES.

dorschner associates

Architecture
Planning

Dorschner|Associates, Inc.
849 E. Washington Ave., Ste. 112
Madison, Wisconsin 53703

JDR ENGINEERING, INC.
5525 NOBEL DRIVE
SUITE 110
MADISON, WI 53711
ph:608.277.1728 fax:608.271.7046
JDR Project No. 140215

ISSUED

02.16.15 CONSTRUCTION DOCUMENTS

PROJECT
MONONA SCHLUTER PARK RESTROOMS
4500 WINNEQUAH ROAD
MONONA, WI 53716

PROJECT NO.
14013-00

DRAWING
ELECTRICAL FLOOR PLAN - LIGHTING AND POWER/SYSTEMS

DATE
02.16.15

E101

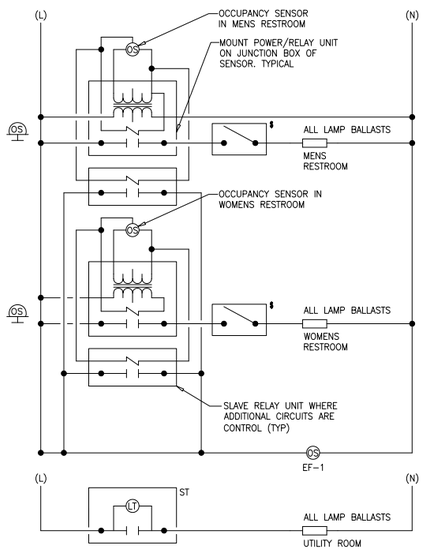

4 E102 LIGHTING CONTROL DIAGRAMS

SCALE: NOT TO SCALE

KEYNOTES:

1. SEE LIGHTING PLANS FOR ACTUAL NUMBER OF LUMINARIES.

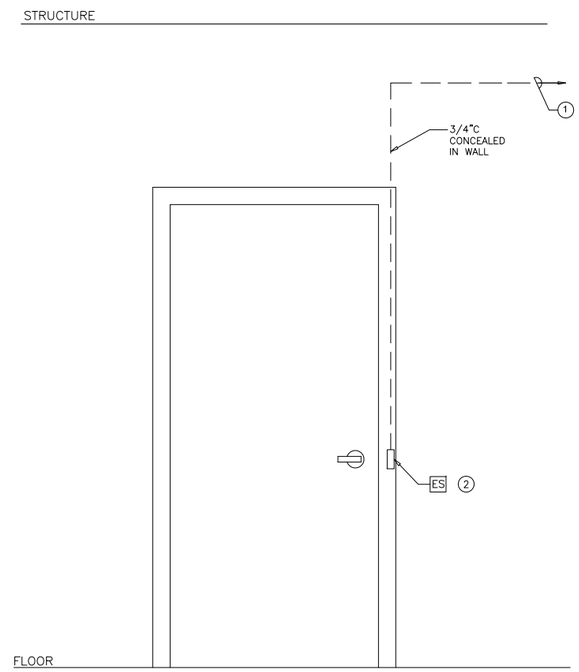

3 E102 DOOR CONDUIT DETAIL FOR ELECTRIC STRIKE

SCALE: NOT TO SCALE

KEYNOTES

1. LOW VOLTAGE POWER FROM POWER SUPPLY LOCATED IN MECHANICAL ROOM.

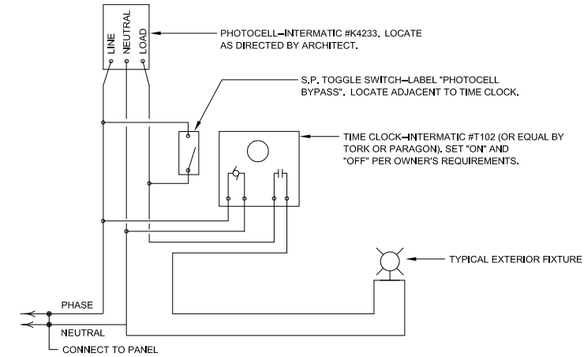

1 E102 EXTERIOR LIGHTING CONTROL DIAGRAM

SCALE: NOT TO SCALE

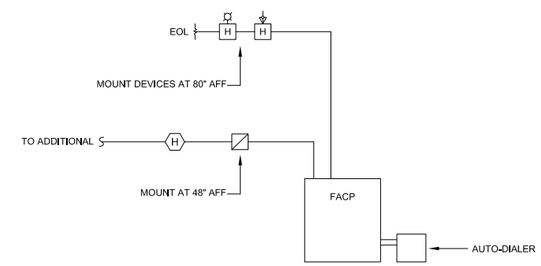

2 E102 FIRE ALARM SYSTEM DIAGRAM

SCALE: NOT TO SCALE

FIRE ALARM NOTES

1. PROVIDE NONCODED, 2-ZONE SYSTEM WITH MANUAL AND AUTOMATIC ALARM.
2. THE CONTRACTOR SHALL FURNISH AND INSTALL ALL MATERIAL, LABOR, EQUIPMENT, DEVICES, ETC. NECESSARY FOR A COMPLETE AND FULLY OPERATION FIRE ALARM SYSTEM. ALL WORK SHALL COMPLY WITH ALL APPLICABLE LOCAL CODES, FEDERAL AND STATE REGULATIONS, NEC, NFPA STANDARDS AND ALL REQUIREMENTS OF THE LOCAL AUTHORITY HAVING JURISDICTION.
3. THE CONTRACTOR SHALL PREPARE AND SUBMIT ALL SHOP DRAWINGS AND PRELIMINARY DOCUMENTATION REQUIRED BY THE LOCAL AUTHORITY FOR FIRE ALARM SYSTEM PERMITS. THIS SHALL INCLUDE BUT IS NOT LIMITED TO ALL DRAWINGS, DIAGRAMS, ZONE SCHEDULES, RISER DIAGRAMS, EQUIPMENT CATALOG SHEETS, SYSTEM SPECIFICATIONS, POINT TO POINT FIRE ALARM DRAWINGS, CONDUIT SIZES AND WIRE COUNTS INCLUDING TYPE AND NUMBER. ALL INFORMATION SHALL COMPLY WITH THE SUBMITTAL REQUIREMENTS FOR THE LOCAL AUTHORITY.
4. ALL FIRE ALARM SYSTEM WIRING SHALL BE ROUTED IN CONDUIT. ALL WIRING SHALL BE CLEAR FROM SHORTS, OPENS AND GROUNDS. PROVIDE A SYSTEM GROUND FOR DEVICES AS REQUIRED PER NFPA. USE ONLY APPROVED CABLE WITHIN RACEWAY, PIPES OR CONDUITS. ALL SHIELDS MUST BE CONTINUOUS THROUGHOUT CIRCUIT, ISOLATED FROM GROUND AND TERMINATE IN THE FIRE ALARM CONTROL PANEL ONLY. THE CONTRACTOR SHALL PROVIDE #12 AWG FOR ALL STROBE CIRCUITS AND AUDIBLE ALARM CIRCUITS.
5. THE CONTRACTOR SHALL PROVIDE BATTERY BACK-UP EMERGENCY POWER SUPPLY TO FIRE ALARM CONTROL PANEL AND ALARM SYSTEM PER LOCAL REQUIREMENTS AND NFPA.

DORSCHNER ASSOCIATES

Architecture
Planning

Dorschner|Associates, Inc.
849 E. Washington Ave., Ste. 112
Madison, Wisconsin 53703

JDR ENGINEERING, INC.
5525 NOBEL DRIVE
SUITE 110
MADISON, WI 53711
ph:608.277.1728 fax:608.271.7046
JDR Project No. 140215

ISSUED

02.16.15 CONSTRUCTION DOCUMENTS

PROJECT
MONONA SCHLUTER PARK RESTROOMS
4500 WINNEQUAH ROAD
MONONA, WI 53716

PROJECT NO.
14013-00

DRAWING
ELECTRICAL DETAILS

DATE
02.16.15

E102

PANEL PP

VOLTS 120/240 V | PHASE 1 Ø | # WIRE 3 W

DESCRIPTION	LOAD (VA)	TY	BREAKER AMP	P	CKT NO	PHASE A	PHASE B	PHASE C	CKT NO	BREAKER AMP	P	TY	LOAD (VA)	DESCRIPTION
LIGHTING	900	L	20	1	1	1,080			2	20	1	R	180	RECEPTACLES
LIGHTING	600	L	20	1	3		960		4	20	1	R	360	RECEPTACLES
EXHAUST FAN EF-1	200	M	20	1	5			380	6	20	1	R	180	RECEPTACLES
ELEC. STRIKE	200	A	20	1	7	380			8	20	1	R	180	RECEPTACLES
SPARE			20	1	9		180		10	20	1	R	180	RECEPTACLES
SPARE			20	1	11			1,000	12	20	1	M	1,000	HAND DRYER
SPARE			20	1	13	1,000			14	20	1	M	1,000	HAND DRYER
SPARE			20	1	15		200		16	20	1	A	200	FACP
SPARE			20	1	17				18	20	1	A	400	FLUSH VALVE XFMRS.
SPARE			20	1	19				20	20	1			SPARE
SPARE			20	1	21				22	20	1			SPARE
SPARE			20	1	23				24	20	1			SPARE

BUS RATING	100	A
MAIN BREAKER	100	A

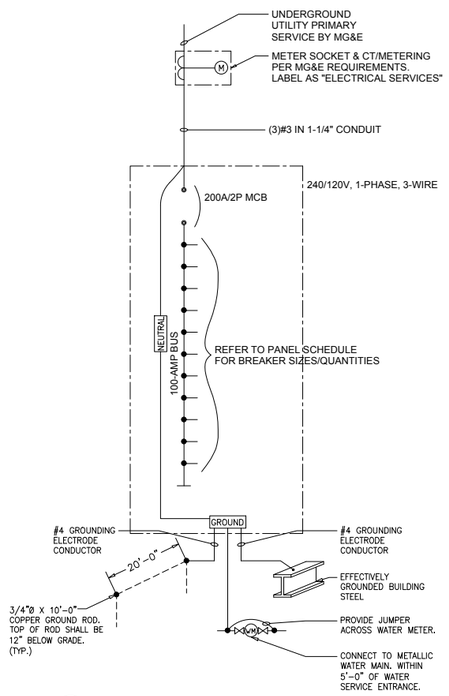

1 E103 ONE-LINE DIAGRAM

SCALE: NOT TO SCALE

LUMINAIRE SCHEDULE

(MTG) MOUNTING:
- RE - RECESSED
- SP - SUSPENDED
- CL - CEILING SURFACE
- WL - WALL
- UC - UNDER CABINET
- CV - COVE
- PL - POLE
- FR- FLANGED RECESSED
- O - OTHER (SEE DESCRIPTION)

DOOR:
- FA - FLAT ALUMINUM
- FS - FLAT STEEL
- RA - REGRESSED ALUMINUM
- RS - REGRESSED STEEL

FINISH:
- PAF - PAINT AFTER FABRICATION
- CSA - FINISH SELECTION BY ARCHITECT

(Type) LAMP TECHNOLOGY:
- FL - FLUORESCENT
- CF - COMPACT FLUORESCENT
- HL - HALOGEN
- IN - INCANDESCENT
- LED - LIGHT EMITTING DIODE
- HS - HIGH PRESSURE SODIUM
- MH - METAL HALIDE
- SMH - SUPER METAL HALIDE
- PSMH - PULSE START METAL HALIDE
- CMH - CERAMIC METAL HALIDE
- O - OTHER (SEE DESCRIPTION)
- XL - EXTENDED LIFE
- XLP - EXTENDED LIFE & OUTPUT

(L/L) LENS/LOUVER:
- A- .125" ACRYLIC
- B- BLACK BAFFLE
- C- CLEAR ALZAK
- D- PARABOLIC
- F- FRESNEL
- G- TEMPERED GLASS
- H- WALL WASHER
- P- POLY CARBONATE
- K- KSH12 .125" ACRYLIC
- K19- KSH19 .156" ACRYLIC
- L- LOW IRIDESCENT SPECULAR ALUM.
- N- NONE
- R- HIGH IMPACT DR ACRYLIC
- O- OTHER (SEE DESCRIPTION)

(TYPE) BALLAST:
- DIM07- LINE DIMMING BALLAST
- DIM10- 0-10V DIMMING BALLAST
- HL- HIGH / LOW LEVEL BALLAST
- ML- MULTI-LEVEL SWITCHING
- HP- HIGH PERFORMANCE / LBF

(TYPE) BALLAST:
- EB- ELECTRONIC BALLAST
- EM- EMERGENCY BATTERY/BALLAST
- DALI- DIGITAL DIMMING BALLAST
- MV- MULTI-VOLTAGE ELECTRONIC 120V-277V
- #BF- BALLAST FACTOR

CATALOG NUMBER SHALL NOT BE CONSIDERED COMPLETE AND MATERIAL SHALL NOT BE ORDERED BY MANUFACTURER AND CATALOG NUMBER ONLY. THE COMPLETE DESCRIPTION AND THE SPECIFICATION SHALL BE COORDINATED WITH THE CATALOG NUMBER TO DETERMINE THE EXACT MATERIAL AND ACCESSORIES TO BE ORDERED. THE FIRST MANUFACTURER LISTED IS THE BASIS FOR DESIGN.

REFER TO SPECIFICATION SECTIONS LIGHTING 26 51 00 FOR ADDITIONAL INFORMATION AND REQUIREMENTS.

ALL LAMPS FOR THIS PROJECT SHALL BE FURNISHED AND INSTALLED BY THE ELECTRICAL CONTRACTOR UNLESS NOTED OTHERWISE.
FLUORESCENT LAMP CORRELATED COLOR TEMPERATURE 4100K, COLOR RENDERING INDEX (CRI) AT OR ABOVE 82, UNLESS NOTED OTHERWISE.

ITEM	DESCRIPTION	DIMENSIONS L	W	H	DIA	MTG	LAMPS TYPE	QTY	MODEL	BALLAST VOLTS	TYPE	L/L	APPROVED MANUFACTURER
F1	ARCHITECTURAL HIGH ABUSE SURFACE LUMINAIRE. HEAVY DUTY EXTRUDED ALUMINUM HOUSING. TAMPER RESISTANT STAINLESS STEEL FASTENERS. WHITE LENS. MATTE WHITE FINISH. SMOOTH FLAT END CAPS.	4'	8"	4"		WL	LED	1	38 WATT	120V	LED	P	COOPER FAIL-SAFE #HVL8-4-LD2-4000-8 LITHONIA #STL4-40L-D40
F2	ARCHITECTURAL HIGH ABUSE SURFACE LUMINAIRE. HEAVY DUTY EXTRUDED ALUMINUM HOUSING. TAMPER RESISTANT STAINLESS STEEL FASTENERS. WHITE LENS. MATTE WHITE FINISH. SMOOTH FLAT END CAPS.	2'	8"	4"		WL	LED	1	19 WATT	120V	LED	P	COOPER FAIL-SAFE #HVL8-2-LD2-2000-8 LITHONIA #STL2-22L-D26
F3	4' INDUSTRIAL WITH NO UPLIGHT. BAKED ENAMEL FINISH. CHAIN MOUNTED FROM STRUCTURE.	1'	4'	-		SP	FL	2	32 WATT F32T8 RS- 70 WATT TOTAL	120V	HP/HL GE232-MVPS-N-S30	N	LITHONIA #EJS232 DAY-BRITE #IS232 METALUX #C-232
F4	8" ROUND WALL MOUNTED DIE-CAST ALUMINUM CYLINDER. UP/DOWN LIGHT	10.55"	19.88"	7.35"		WL	LED	1	24 WATT	120V	LED	N	FC #FCC820-120V-LED-4K-BZ-UWFL-DWFL-LD-EMR
F5	8" ROUND WALL MOUNTED DIE-CAST ALUMINUM CYLINDER. UP/DOWN LIGHT (PROVIDED WITH DOWNLIGHT ONLY)	10.55"	19.88"	7.35"		WL	LED	1	24 WATT	120V	LED	N	FC #FCC820-120V-LED-4K-BZ-UNO-DWFL-LD
EMI	EMERGENCY UNIT. TWO ADJUSTABLE 6 VOLT HEADS. WHITE THERMOPLASTIC HOUSING. SELF TEST AND DIAGNOSTICS OF INVERTER AND LAMPS.	6"	14"	3.6"		WL	IN	2	INCLUDED	120V	-	O	LITHONIA #ELM2 SD DUAL-LITE #LZ2 1 McPHILBEN # CAX6

GENERAL NOTES:

1. ALL BALLASTS SHALL BE ROGRAMMED START UNLESS NOTED OTHERWISE. LESS THAN 10% THD. FREQUENCY OF OPERATION SHALL BE 40 kHz - 50 kHz AND UNITS SHALL OPERATE WITHOUT VISIBLE FLICKER. ACCEPTABLE MANUFACTURERS: SYLVANIA QUICKTRONIC, ADVANCED AND UNIVERSAL.
2. EACH FLUORESCENT FIXTURE SHALL BE SUPPLIED WITH QUICK DISCONNECTING MEANS FOR ALL BALLASTS AS REQUIRED BY NEC 410.73 AND AS MANUFACTURED BY THOMAS AND BETTS LD2, LD3 OR EQUAL.
3. BALLAST SHALL BE INSTANT START, -20 DEGREE STARTING, LESS THAN 10% THD. FREQUENCY OF OPERATION SHALL BE 40 kHz - 50 kHz.
3. ALL LED FIXTURES TO HAVE A COLOR RENDERING INDEX RATING GREATER THAN OR EQUAL TO 80. COLOR TEMPERATURE OF LED FIXTURES TO BE 40K.
4. FIXTURES F4 & F5 SHALL BE COMPATIBLE FOR USE WITH DIMMER.

dorschner associates

Architecture
Planning

Dorschner|Associates, Inc.
849 E. Washington Ave., Ste. 112
Madison, Wisconsin 53703

JDR ENGINEERING, INC.
5525 NOBEL DRIVE
SUITE 110
MADISON, WI 53711
ph:608.277.1728 fax:608.271.7046
JDR Project No. 140215

ISSUED

02.16.15 CONSTRUCTION DOCUMENTS

PROJECT
MONONA SCHLUTER PARK RESTROOMS
4500 WINNEQUAH ROAD
MONONA, WI 53716

PROJECT NO.
14013-00

DRAWING
ELECTRICAL DETAILS AND SCHEDULES

DATE
02.16.15

E103

Sec. 2-4-25 Committee on Sustainability
(This section added per Ordinance 8-10-616, adopted September 20, 2010.)

(a) **Composition.** The Committee on Sustainability shall consist of two (2) Council members and ten (10) citizen members. The Mayor and City Administrator shall be ex-officio non-voting members of the Committee.

(b) **Appointments.**
(1) Council Members. The Council members of the Committee shall be appointed by the Mayor, subject to confirmation by the Council. The Council members shall serve for a one (1) year term commencing May 1 of each year, or until their successors are appointed and confirmed by the Council. One (1) of the Council members shall be designated by the Mayor to serve as Chairperson of the Committee.
(2) Citizen Members. The ten (10) citizen members of the Committee shall be appointed by the Mayor, subject to confirmation by the Council. The terms of the citizen members shall be three (3) years beginning May 1st and shall be staggered so that not more than three (3) such appointments are made annually.

(c) **Duties and Responsibilities.** The Committee shall have the following duties and responsibilities which shall be advisory except as otherwise provided:
(1) To review and recommend to the Council policies and programs relating to sustainability.
(2) To review and recommend to the Finance Committee all budgetary, revenue and expenditure proposals relating to such policies and programs.
(3) To perform such duties and have such responsibilities as the Council shall from time to time, by ordinance, resolution, or by law, direct.

Sec. 2-4-26 Facilities Committee.
(This section added per Ordinance 11-12-640, adopted December 3, 2012.)

(a) **Composition.** The Facilities Committee shall consist of one (1) Council member, one (1) staff member, and six (6) citizen members, consisting of members with experience in HVAC, electrical, plumbing, construction, architecture, civil, or landscape work. The Council member shall serve as chair and shall not vote except in the event of a tie breaker. The Mayor and City Administrator shall be ex-officio non-voting members of the Committee.

(b) **Appointments.**
(1) Council Member. The Council member of the Committee shall be appointed by the Mayor, subject to confirmation by the Council. The Council member shall serve for a one (1) year term commencing May 1 of each year, or until his/her successor is appointed and confirmed by the Council.
(2) Citizen Members. The six (6) citizen members of the Committee shall be appointed by the Mayor, subject to confirmation by the Council. The terms of the citizen members shall be three (3) years, beginning May 1 and staggered each year.

(c) **Duties and Responsibilities.** The Committee shall have the following duties and responsibilities which shall be advisory except as otherwise provided:
(1) To provide direction and support, from inception to completion, to all City committees and departments involved in facility-related projects.
(2) To use design and construction experience to assist in the completion of the final design and budget.
(3) To monitor projects through bidding, construction, project closeout, and assist with one-year punch if requested.
(4) To review projects for energy efficiency.
(5) To ensure that each project follows the “Facility Development Process”.

(6) To assist in the creation of a preventive maintenance program and maintenance cost control.

CITY OF MONONA

Ad Hoc FACILITIES COMMITTEE

Project Procedures

AHFC = Ad Hoc Facilities Committee

A/E = Architect / Engineer

Dept/Comm = Department or Committee/Board

1. AHFC to determine project design/ bid/ build schedule
2. AHFC will meet with Dept/Comm. To establish project budget
3. AHFC will issue RFP for solicitation of A/E services
4. Dept./Comm will select A/E via interview process or direct selection.
5. AHFC will draft/prepare A/E contract for City Attorney review
6. A/E will me with Dept./Comm to determine program
7. A/E will meet with AHFC to determine that program as established by Dept./Comm fall within project budget
8. A/E will prepare conceptual drawing a long with conceptual estimate.
9. A/E will prepare schematic design drawings for review by AHFC and Dept./Comm.
10. City of Monona to provide site survey and geotechnical report to A/E.
11. A/E to proceed with Design Development drawings with preliminary review by Plan Commission and Public Works and MFD Committee. (Final review by Dept. Comm.)
12. A/E will provide 35% cost estimate
13. A/E to proceed with construction documents preparation. (Project manual and drawings.)
14. At conclusion of construction documents preparation the A/E will provide a 100% estimate
15. Final review by Plan Commission. Public Works Committee and Monona Fire Dept. and Police Dept.
16. Upon approval of final estimate and construction documents by AHFC , The project will be advertised for bidding.
17. Contract will be awarded to lowest responsible bidder.
18. Construction contract will be prepared by AHFC for City Attorney Review.
19. City will set up Pre-construction meeting and coordinate groundbreaking ceremony if so desired.
20. A/E to attend progress meetings, review submittals, provide site observation reports, and review contractor pay requests.
21. A/E will draft change orders for city approval. Change orders over $5,000 will be reviewed by AHFC.
22. A/E will provide final punchlist, review warranties, and O&M manuals.
23. A/E will issue certificate of substantial completion and provide one final review of punchlist completed items.
24. A/E will recommend final payment to contractor.
25. Project dedication ceremony of so desired.

Note: Where this list of procedures indicates City, it relates to City Staff (Janine Glaeser)

City of Monona – Department of Public Works

5211 Schluter Road
Monona, Wisconsin 53716
Phone: 608-222-2525
Fax: 608-222-9225
Website: www.mymonona.com

Facilities Development Process

1. Generate "Idea" for project , proposed by board or department (Requesting Body)
2. Review of project concept feasibility by Facility Committee, proposing board to complete and submit a "**Facilities Report for Proposed Structures.**" *(see attached report form)*
3. Conduct study of similar projects by Internal Staff or Consultant & develop concept program & budget
4. Send notifications to neighborhood of proposed construction site
5. Complete internal review with requesting body
6. 30% or Preliminary Design - Review of design and confirm preliminary budget by Facility Committee
7. Continue forward with design development – review by appropriate committees
8. Review of 65% design and reaffirm budget by Facility Committee / consultant
9. Complete second internal review with requesting body & appropriate committees
10. Review of 100% design and development of detailed estimate by Facility Committee/consultant
11. Final Review/approval of project design and budget by City Council – project goes out for bid.
12. Review of bid and construction contracts by Facility Committee
13. Coordinate Construction Administration and assist with one year punch list, if requested – Staff/Facility Committee/ Consultant

City of Monona – Department of Public Works

5211 Schluter Road
Monona, Wisconsin 53716
Phone: 608-222-2525
Fax: 608-222-9225
Website: www.mymonona.com

Facilities Report for Proposed Structures

Date _____

Project title_____

Project manager _____

Architect/engineer_____

Project Milestones for review: *(circle one)*

A. Concept Introduction 0%
B. Preliminary Design 30%
C. Design Development 65%
D. Final Design 100%

Type of Project:

1. Project Description: _____
2. Authorized Budget and Funding Source: _____
3. Space Summary:
   Per Program:_____
   Gross Area: _____

   Per Design: _____
   Gross Area: _____

4. Schedule:
   Submission of Bid Documents for Final Review: _____
   Bid Opening: _____
   Start of Construction: _____
   Substantial Completion and Occupancy: _____
   Final Acceptance: _____

5. Budget Summary:
   Construction Contingency: _____
   AlE Design Fee: _____
   Furnishings & Fixtures: _____
   Survey, Geotechnical, Permits, Plan Revie: _____
   Moveable & Special Equip: _____

   Total:
   Construction Cost *I* GSF Total _____
   Cost *I* GSF _____

   Budget Notes:
   Alternate No. 1 _____
   Alternate No. 2 _____

Items to be addressed by Facilities Committee

Solar Lease and buyout

LED Retrofits to Garages

City Hall Office Space Expansion

Fire and Police Department Renovations

Community Center Renovation

Pool Discharge to Storm Drain

City Campus Geothermal – Winnequah Park

Items that to take a look at:

Bray Study
Trane Study
Sustainability Plan Annual Report

Infrastructure Projects Considered to Meet 25 by 25 Goal

Type of Project	***Location / Department***
Solar Panels	Fire Department roof Well and Reservoir 3 roof City Hall Roof Ahuska Park Shelter Roof
Solar Thermal	Community Pool
Variable Frequency Pump	Community Pool Well 1, 2, 3
Geothermal	Winnequah Park (Serve City Hall, Library, Community Center)
Energy Efficiency - 2011 (replace boilers, controls, air cooling condensing units, windows)	City Hall Library Community Center
Energy Efficiency - 2012 - 2025 (replace air handling equipment, boilers at Community Center)	City Hall Library Community Center
Upgrade Windows	Community Center
Upgrade Insulation at City Facilities	City Hall Library Community Center
Electric Vehicles (NEV's)	Public Works Parks and Recreation
Bio-Diesel	Public Works
E85	Public Works
Purchase Clean Energy	Entire City
Retrofit Street Lighting with LED Lights	All City Streets
Install Two Electric Vehicle Charging Stations	Community Center