SITE SUMMARY

LOT AREA = 28,255 S.F.

BUILDING AREA

EXISTING = 1704 S.F.
PROPOSED = 672 S.F.
TOTAL = 2376 S.F.

PARKING

ACCESSIBLE STALLS = 1

REGULAR STALLS = 12
TOTAL PROVIDED = 13

LANDSCAPING POINTS

REQUIRED = 195 PTS
PROVIDED = 232 PTS

TREES: REQUIRED = 1
PROVIDED = 2

SITE LIGHTING = UNCHANGED

LOT GREEN SPACE = 12,120 S.F.
DISTURBED AREA = 18,883 S.F.

PLANT SPECIES SCHEDULE

(A) CRIMSON KING MAPLE (ACER PLATANOIDES) (1) 2" MIN. CALIPER SIZE

(B) JAPANESE UPRIGHT YEW (TAXUS CUSPIDATA) (12) 5 GALLON SIZE

(C) EXIST LOW SHRUB (8) (UNCHANGED)

NEW ROOF MOHAWK) RED

SAND COLORED SIFS

CULTURED STONE

GRADE LINE

PLAN SHEET INDEX

SITE PLAN, ELEVATIONS, FOUNDATION PLAN	1
FLOOR PLAN, SECTIONS	2

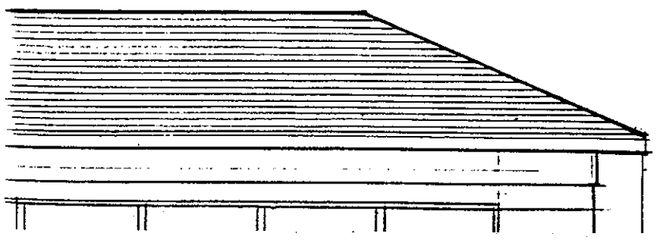

RECEIVED JUL 11 2012

PROJECT:
MONONA SHELL MART
1720 EAST BROADWAY BOULEVARD
MONONA, WISCONSIN 53716

7.09.2012

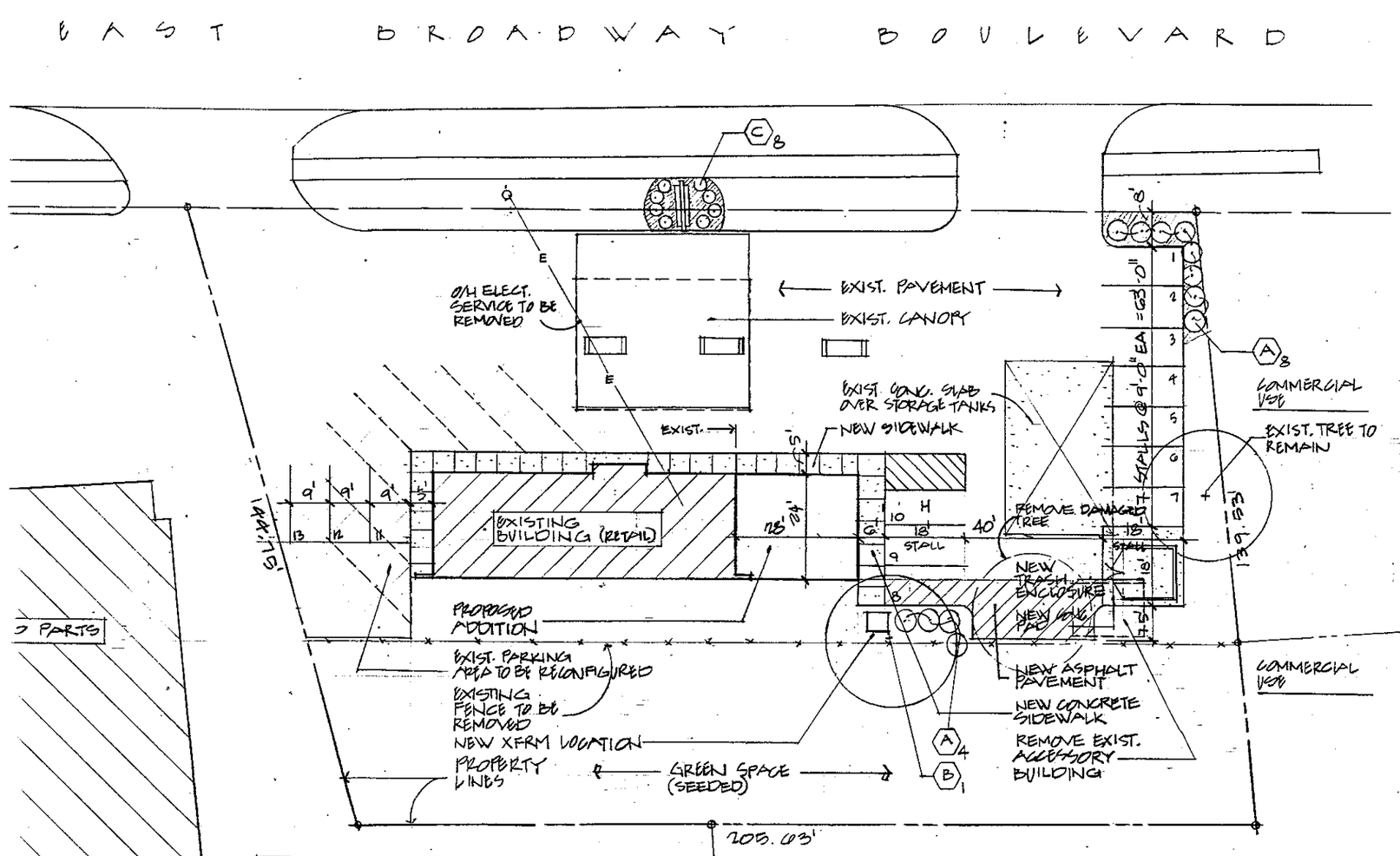

LANDSCAPE LEGEND

E — PLANT SPECIES (SEE SCHEDULE)
12 — NUMBER OF PLANTS IN GROUP

SITE SUMMARY

LOT AREA = 28,255 S.F.
BUILDING AREA
EXISTING = 1704 S.F.
PROPOSED = 672 S.F.
TOTAL = 2376 S.F.
PARKING
ACCESSIBLE STALLS = 1

LOT GREEN SPACE = 12,120 S.F.
DISTURBED AREA = 1883 S.F.

PLANT SPECIES SCHEDULE

A — CRIMSON KING MAPLE (ACER PLATANOIDES) (1)

PROJECT SITE PLAN

N

Rodney W. Hell, AIA

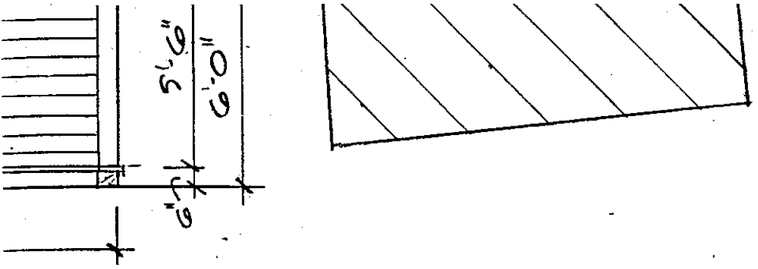

E — PLANT SPECIES (SEE SCHEDULE)
12 — NUMBER OF PLANTS IN GROUP

PROJECT SITE PLAN

SCALE: 1" = 20'-0"

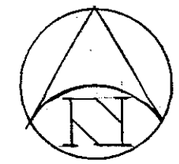

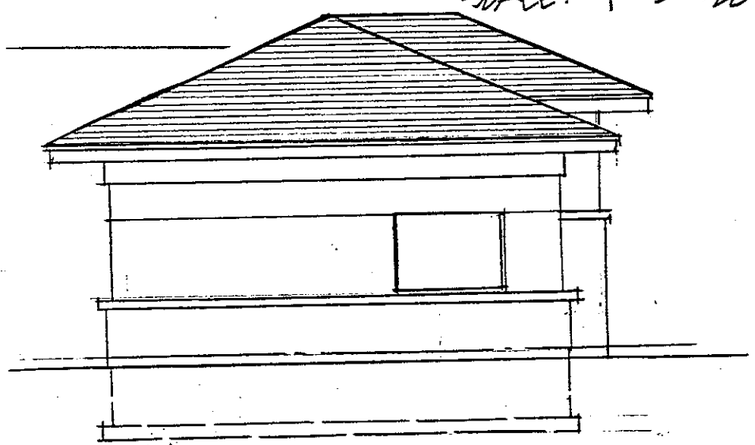

EAST ELEVATION
1/8" = 1'-0"

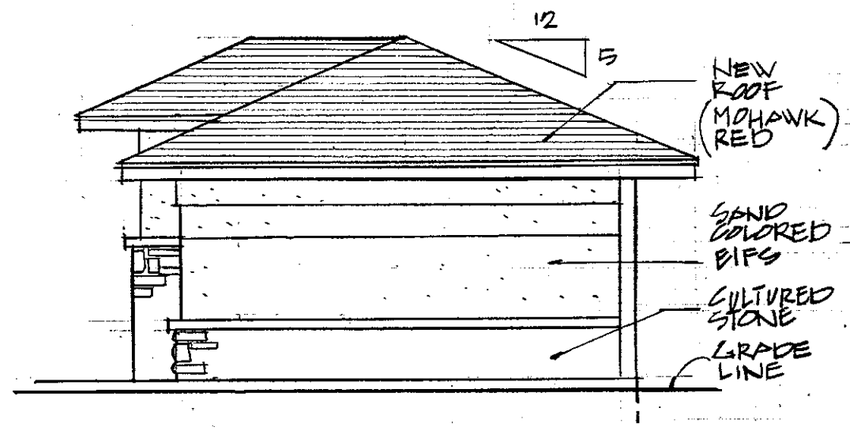

WEST ELEVATION
1/8" = 1'-0"

NORTH ELEVATION
1/8" = 1'-0"

SITE SUMMARY

LOT AREA = 28,255 S.F.

BUILDING AREA

EXISTING	=	1704 S.F.
PROPOSED	=	672 S.F.
TOTAL	=	2376 S.F.

PARKING

ACCESSIBLE STALLS = 1

REGULAR STALLS	=	12
TOTAL PROVIDED	=	13

LANDSCAPING POINTS

REQUIRED	=	195 PTS
PROVIDED	=	232 PTS

TREES: REQUIRED = 1
PROVIDED = 2

SITE LIGHTING = UNCHANGED

LOT GR
DISTURB

PLANT S

A
B
C

PLAN SHEET INDEX

SITE PLAN, ELEVATIONS, FOUNDATION PLAN

FLOOR PLAN, SECTIONS