SCS ENGINEERS

ORDER OF SHEETS

Sheet 1	TITLE SHEET
Sheet 2	CONSTRUCTION NOTES
Sheet 3	EXISTING CONDITIONS
Sheet 4	DEMOLITION PLAN
Sheet 5	OVERALL PROPOSED SITE PLAN
Sheet 6	PARK IMPROVEMENTS
Sheet 7	SEDIMENT STRUCTURE NO. 1
Sheet 8	SEDIMENT STRUCTURE NO. 2
Sheet 9	COVE DREDGING PLAN AND PROFILE
Sheet 10	SHORELINE RESTORATION
Sheet 11	TRAFFIC CONTROL PLAN
Sheets 12-21	DETAILS

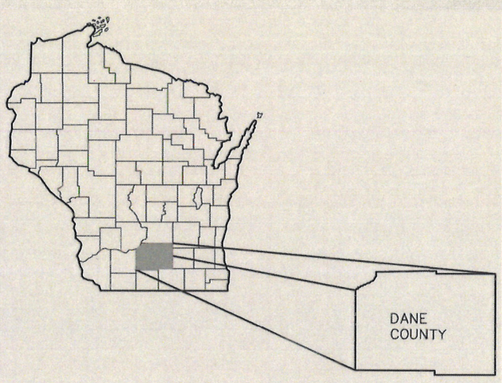

CITY OF MONONA
PLAN OF PROPOSED IMPROVEMENT
MO-01-16

CONSTRUCTION DRAWINGS
SCHLUTER BEACH IMPROVEMENT PROJECT

(STORM/SEDIMENT STRUCTURES, DREDGING, SHORELINE RESTORATION, PARK IMPROVEMENTS)

N

City of Monona

ACCEPTED FOR

CITY of MONONA

(Date) (Signature)

PREPARED BY:

SCS ENGINEERS

2830 DAIRY DRIVE MADISON, WI 53718-6751
PHONE: (608) 224-2830

WISCONSIN
BETSY L. POWERS
E-32833
MONONA
WI
PROFESSIONAL ENGINEER

1-21-16
(Date)

(Signature)

PROJECT NOS. 252131101.00/252131102.00/252131134.00		DRAWN BY: AB/KP	
DRAWN:	1/20/15	CHECKED BY: MH/BP	
REVISED:	1/21/16	APPROVED BY: BP	

GENERAL NOTES

ALL WORK SHALL COMPLY WITH THE CITY OF MONONA STANDARD SPECIFICATIONS FOR PUBLIC WORKS CONSTRUCTION, STANDARD SPECIFICATIONS FOR SEWER AND WATER CONSTRUCTION IN WISCONSIN, SIXTH EDITION; PERMIT CONDITIONS; AND THE STATE OF WISCONSIN STANDARD SPECIFICATIONS FOR HIGHWAY AND STRUCTURE CONSTRUCTION, MOST RECENT EDITION.

CITY OF MONONA WORKING HOURS ARE BETWEEN 7:00 AM AND 7:00 PM MONDAY THROUGH SATURDAY. ANY WORK PROPOSED THAT IS NOT WITHIN DESIGNATED WORKING HOURS MUST BE APPROVED BY THE CITY OF MONONA PRIOR TO BEGINNING WORK.

IN-WATER CONSTRUCTION WORK SHALL NOT COMMENCE PRIOR TO JUNE 1, 2016, WITHOUT PRIOR AUTHORIZATION FROM WDNR.

ELEVATIONS SHOWN ON THE PLANS ARE U.S.G.S. DATUM. COORDINATES ARE DANE COUNTY COORDINATE SYSTEM.

WATER LEVELS OF LAKE MONONA FLUCTUATE WITH SEASONAL RAINFALL. CONTRACTOR SHALL PERFORM CONSTRUCTION WORK IN ACCORDANCE WITH CONTRACT DOCUMENTS AT ALL LAKE WATER SURFACE ELEVATIONS ENCOUNTERED. FOR LAKE LEVEL INFORMATION SEE (http://www.countyofdane.com/lwrd/landconservation/lakelevelpg.aspx).

DATA SHOWN IS REPRESENTATIVE OF THE TOPOGRAPHIC SURVEYS TAKEN ON JUNE 27, 2013 AND JULY 17, 2013.

SCHLUTER PARK PROPERTY LIMITS SHALL BE USED FOR MATERIAL STORAGE AND CONSTRUCTION STAGING OPERATIONS, ONSITE MATERIALS SHALL NOT BE STORED IN THE ROADWAY OR INHIBIT VEHICULAR TRAFFIC.

PRESERVE AND PROTECT TREES. NO TREES SHALL BE REMOVED WITHOUT PRIOR APPROVAL FROM THE OWNER OR ENGINEER. IF TREE TRIMMING IS REQUIRED IT SHALL BE COMPLETED AS PART OF THE ITEM CLEARING AND GRUBBING.

CONTRACTOR SHALL NOTIFY THE CITY OF MONONA POLICE DEPARTMENT (608-222-0463) AND FIRE DEPARTMENT A MINIMUM OF 72 HOURS IN ADVANCE OF ANY ROADWAY WORK THAT COULD IMPEDE THE MOVEMENT OF EMERGENCY VEHICLES.

CONTRACTOR SHALL COORDINATE WITH UTILITIES PRIOR TO START OF CONSTRUCTION AND DURING CONSTRUCTION FOR RELOCATES.

THE LOCATIONS OF EXISTING AND PROPOSED UTILITY INSTALLATIONS AS SHOWN ON THE PLANS ARE APPROXIMATE. THERE MAY BE OTHER UTILITY INSTALLATIONS WITHIN THE PROJECT AREA THAT ARE NOT SHOWN.

SILT FENCE OR SILT SOCK AND TRACKING PAD SHALL BE PLACED AS SHOWN ON THE PLANS OR AS DIRECTED BY THE OWNER OR ENGINEER OR AS REQUIRED BY FIELD CONDITIONS AND SHALL BE PLACED PRIOR TO THE START OF CONSTRUCTION.

ANY ARTIFACTS OR ARCHAEOLOGICAL FINDINGS SHALL BE BROUGHT TO THE ATTENTION OF THE ENGINEER IMMEDIATELY.

CONTRACTOR IS SOLELY RESPONSIBLE FOR GAINING ACCESS TO THE DREDGING SITE. CONTRACTOR SHALL VERIFY EXISTING ACCESS WATER DEPTHS FOR EQUIPMENT ACCESS TO THE DREDGING SITE. ANY MODIFICATIONS NECESSARY FOR DREDGING EQUIPMENT ACCESS TO THE PROJECT SITE SHALL BE CONSIDERED INCIDENTAL TO THE OVERALL COST OF THE PROJECT.

PLAYGROUND EQUIPMENT WILL BE REMOVED AND REPLACED BY OWNER IF NECESSARY.

LEAD PAINT AND ASBESTOS INSPECTIONS HAVE BEEN COMPLETED ON THE RESTROOM BUILDING SCHEDULED FOR DEMOLITION. SEE THE SPECIFICATIONS FOR ADDITIONAL REQUIREMENTS.

CONTRACTOR SHALL COORDINATE WITH CITY OF MONONA PARKS DEPARTMENT FOR PARK CLOSURES. CONTRACTOR IS RESPONSIBLE TO SUPPLY ALL FENCE MATERIALS AND MANPOWER TO ERECT AND MAINTAIN CLOSURE SAFETY FENCING DURING ALL CONSTRUCTION PHASES.

MAINTAIN ACCESS TO SURROUNDING BUSINESSES THROUGHOUT CONSTRUCTION.

WINNEQUAH ROAD MUST BE OPEN FROM THE DATES OF JULY 3 THROUGH JULY 6TH, 2016.

PROTECT SHALLOW ROOTS OF TREES WITH 6-12 INCHES OF MULCH OR PLYWOOD COVERED WITH 6-12 INCHES OF MULCH. CITY'S URBAN FORESTER (MIKE JOHNSON, 608-259-9078) MAY BE ABLE TO PROVIDE MULCH TO SITE WITHOUT CHARGE. COORDINATE MULCH SUPPLY WITH CITY OF MONONA.

WHEN THE QUANTITY OF ITEMS OF BASE AGGREGATE DENSE OR HMA PAVEMENT TYPE E-1 IS MEASURED FOR PAYMENT BY THE TON, THE DEPTH OR THICKNESS OF THE COURSE SHOWN ON THE PLANS IS A MINIMUM AND THE ACTUAL THICKNESS WILL DEPEND ON THE DISTRIBUTION OF THE MATERIAL AS DIRECTED BY THE ENGINEER. ANY WATERING FOR DUST CONTROL OR COMPACTION SHALL BE INCIDENTAL TO THE UNIT PRICE FOR BASE AGGREGATE DENSE. ASPHALT BINDER SHALL BE 19.0 mm NOMINAL SIZE GRADATION. SURFACE SHALL BE 12.5 mm NOMINAL SIZE GRADATION. TACK COAT TO BE APPLIED AT THE APPLICATION RATE OF 0.025 GAL/SY. INCLUDES ALL ASPHALTIC MATERIAL.

ALL TOPS OF MANHOLES AND GATE VALVES IN THE ROADWAYS SHALL BE SET ¼-INCH BELOW FINISHED GRADE, AND GROUTED TO MEET ROADWAY CROSS SLOPES AND PROFILES PROVIDED ON THE PLANS. RIM ELEVATIONS ON PLAN SET ARE TO A FLUSH FINISHED GRADE. ADJUSTMENTS REQUIRED AFTER THE FINAL SURFACE IS PLACED SHALL BE MADE WITHOUT SAW CUTTING OF THE ROADWAY.

JOINT TIES ARE REQUIRED FOR THE LAST 3 JOINTS OF RCP STORM SEWER PIPE AND APRON ENDWALLS FOR PIPE 36 INCHES IN DIAMETER OR GREATER. ALL STORM SEWER APRON ENDWALLS OVER 12 INCHES IN DIAMETER SHALL INCLUDE A FACTORY INSTALLED PIPE GRATE.

ALL UTILITY CROSSINGS SHALL BE IN PLACE PRIOR TO PLACEMENT OF CURB AND GUTTER.

CONTRACTOR SHALL PROVIDE SUBGRADE PROTECTION OF ROADWAY AND UTILITY TRENCHES FROM PONDING WATER AND PROMOTE POSITIVE DRAINAGE FOR THE SITE. NO ADDITIONAL QUANTITIES SHALL BE PAID TO REPLACE INITIAL ROADWAY SUBGRADE OR TRENCH BACKFILL MATERIAL THAT BECOMES UNSUITABLE DURING CONSTRUCTION DUE TO THE CONTRACTOR'S CONSTRUCTION METHODS AND OR NEGLIGENCE.

EXISTING ASPHALTIC ROADWAYS SHALL REMAIN IN PLACE UNTIL SUBGRADE GRADING OCCURS, WITH THE EXCEPTION OF UTILITY TRENCH AREAS (MINIMIZE DISTURBANCE), CONTRACTOR SHALL PROVIDE ACCESS FOR LAND OWNERS AT ALL TIMES. RESIDENTS SHALL BE ABLE TO USE REMAINING PORTIONS OF ASPHALT FOR ACCESS. NO MILLING SHALL BE ALLOWED.

THE CONTRACTOR SHALL BE RESPONSIBLE TO MOVE/REMOVE ALL FOREIGN OBJECTS SUCH AS BOULDERS, LOGS, ETC. TO ACHIEVE FINAL DREDGE ELEVATIONS IN THE COVE.

ALL ASPHALT DAMAGED BY THE CONTRACTOR'S OPERATIONS OUTSIDE THE ASPHALT REMOVAL LIMITS SHOWN ON THE PLANS, SHALL BE REPLACED BY THE CONTRACTOR AT THEIR OWN EXPENSE.

SANITARY SEWER SHALL BE TELEVISED IN ACCORDANCE WITH THE CITY OF MONONA STANDARD SPECIFICATIONS. TELEVISING SHALL BE INCIDENTAL TO THE LINEAR FOOT PRICE FOR SANITARY SEWER.

ALL TOPSOIL AREAS SHALL BE RESTORED WITH SEED (MADISON PARKS). FERTILIZER TYPE B AND MULCH UNLESS OTHERWISE NOTED.

ALL TOPSOIL SHALL BE SALVAGED FROM THE PARK AREA AND PLACED ON THE TOP OF THE GRADING AND SHAPING PARK MATERIAL. TOPSOIL SHALL BE PLACED AT LEAST 4" THICK.

ANY DE-WATERING FOR PARK IMPROVEMENTS OR GRADING SHALL BE CONSIDERED INCIDENTAL TO GRADING AND SHAPING PARK ITEM AND OR THE STORM SEWER INSTALLATION.

ALL GRADING AND DEWATERING SHALL REMAIN WITHIN THE EXISTING PROPERTY LINES.

PROVIDE JOINT PATTERN FOR CONCRETE PAVEMENT PRIOR TO PLACEMENT OF CONCRETE.

ANY PARK APPURTENANCE, FENCE OR DECORATIVE LANDSCAPE ITEM DAMAGED DURING CONSTRUCTION OR BY RE-INSTALLATION SHALL BE REPLACED AT THE CONTRACTOR'S OWN EXPENSE.

THE OWNER HAS THE RIGHT TO QUESTION ANY QUANTITIES SUBMITTED FOR PAYMENT. WEIGHT TICKETS AND/OR MEASUREMENTS, ETC. MAY BE NEEDED AND REQUESTED FOR VERIFICATION BY THE OWNER.

TURBIDITY BARRIERS SHALL BE INSPECTED AT LEAST ONCE PER DAY.

PRESERVE AND PROTECT EXISTING WETLAND.

DIGGERS HOTLINE

TO OBTAIN LOCATION OF PARTICIPANTS' UNDERGROUND FACILITIES BEFORE YOU DIG IN WISCONSIN

TOLL FREE: (800) 242-8511
TDD: (800) 542-2289
ONLINE: WWW.DIGGERSHOTLINE.COM

UTILITIES

* DIGGER'S HOTLINE
  8112 WEST BLUE MOUND ROAD
  WAUWATOSA, WI 53213
  1-800-242-8511

* MADISON GAS & ELECTRIC (MG&E)
  ATTN: JOHN WICHERN (GAS)
  PO BOX 1231
  MADISON, WI 53701
  608-252-1563

* CHARTER COMMUNICATIONS
  ATTN: GLEN JACKUSZ
  2701 DANIELS STREET
  MADISON, WI 53718
  608-274-3822 EXT. 129

* MADISON GAS & ELECTRIC (MG&E)
  ATTN: RICH PARKER (ELECTRIC)
  PO BOX 1231
  MADISON, WI 53701
  608-252-7379

* DENOTES DIGGER'S HOTLINE MEMBERS

* AT&T
  ATTN: CAROL ANASON
  316 WEST WASHINGTON AVE., ROOM 601
  MADISON, WI 53703
  OFFICE PHONE: 608-252-2385
  ca2624@att.com

* CITY OF MONONA
  ATTN: DAN STEPHANY - PUBLIC WORKS
  5211 SCHULTER ROAD
  MONONA, WI 53716
  608-222-2525

BENCH MARKS

NO.	LOCATION (DANE COUNTY)	ELEVATION (NAVD 88)	DESCRIPTION
1.	E 834,608.43, N 481,755.23	850.53	PK NAIL IN PARKING LOT
2.	E 834,360.16, N 481,687.63	851.26	PK NAIL IN PAVEMENT-WINNEQUAH ROAD
3.	E 834,487.81, N 481,506.67	851.27	PK NAIL IN PAVEMENT-WATERMAN WAY

DESIGNER

SCS ENGINEERS
2830 DAIRY DRIVE
MADISON, WI 53718
ATTN: BETSY POWERS
(608) 224-2830

DNR LIASON

WISCONSIN DEPARTMENT OF NATURAL RESOURCES
WENDY PEICH
3911 FISH HATCHERY ROAD
FITCHBURG, WI 53713
(608) 275-3481

SCHLUTER BEACH COVE/LAKE MONONA

PRIVATE RESIDENCE
4507 WINNEQUAH ROAD

48" HDPE

PLAYGROUND EQUIPMENT

WOOD RETAINING WALL

SCHLUTER BEACH PARK

RESTROOMS

GAZEBO

PARKING LOT (ASPHALT)

DRIVEWAY

(CONC.)

WINNEQUAH ROAD (ASPHALT)

WATERMAN WAY (ASPHALT)

8" SAN. SEW.

8" SAN.

12" STORM

18" STORM

18" RCP

29"x45" RCP

2" WATER

4" SANITARY

CURB INLET
IE=847.23

SAN/MH
RIM=850.65
IE=842.75

LEGEND

- PROPERTY LINE
- PARCEL LINE/RIGHT-OF-WAY
- GROUND SURFACE CONTOUR (1' INTERVAL)
- GROUND SURFACE CONTOUR (5' INTERVAL)
- FENCE
- OVERHEAD UTILITY
- TELEPHONE
- WATER
- STORM SEWER
- SANITARY SEWER
- GAS
- BURIED ELECTRIC
- EDGE OF SAND BEACH
- EDGE OF RIPRAP
- 18" TREE WITH DIAMETER
- PAVED PARKING/PATH
- SIGN
- PARK GRILL
- BENCH
- WETLAND

NOTES:

1. ALL PARK PATHS ARE ASPHALT.
2. WETLAND LIMITS MARKED BY MS. SALLY JAROSZ, WDNR, DURING SITE VISIT ON AUGUST 11, 2015. WETLAND FLAGS WERE SURVEYED BY SCS ENGINEERS ON AUGUST 20, 2015.

N

40 0 40

SCALE: 1" = 40'

PROJECT NO.	25213134.00	DRAWN BY:	JB/KP/AHB
DRAWN:	04/08/14	CHECKED BY:	BP/MH
REVISED:	11/24/15	APPROVED BY:	

ENGINEER: SCS ENGINEERS
2830 DAIRY DRIVE MADISON, WI 53718-6751
PHONE: (608) 224-2830

CLIENT: CITY OF MONONA
5211 SCHLUTER ROAD
MONONA, WI
53716-2598
608-222-2525

SITE: CITY OF MONONA
SCHLUTER BEACH IMPROVEMENT PROJECT

EXISTING CONDITIONS

SHEET 3

I:\25213134\Drawings-General\EXISTING.dwg, 11/24/2015 3:20:30 PM

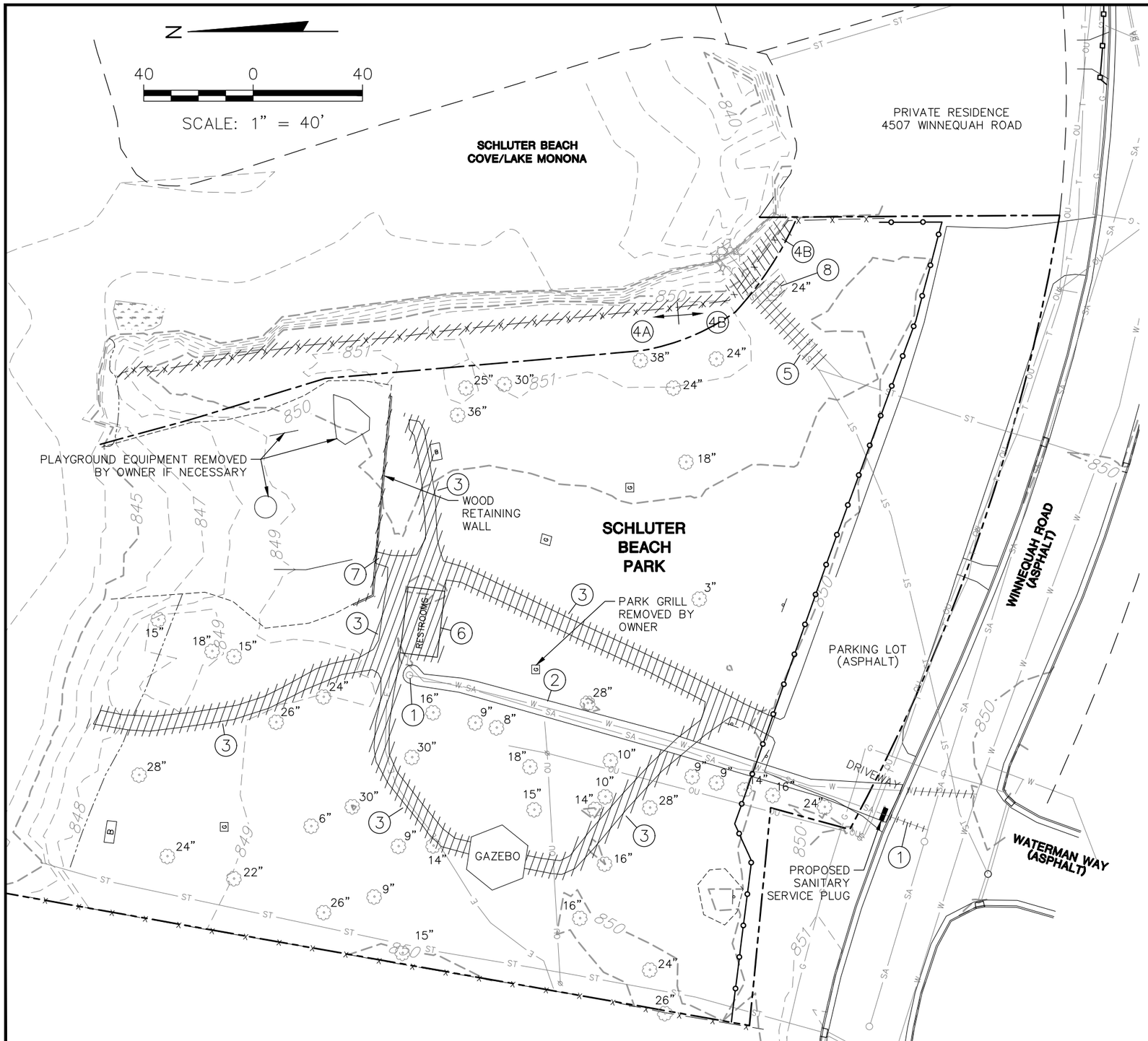

LEGEND

- PROPERTY LINE
- PARCEL LINE/RIGHT-OF-WAY
- GROUND SURFACE CONTOUR (1' INTERVAL)
- GROUND SURFACE CONTOUR (5' INTERVAL)
- FENCE
- OVERHEAD UTILITY
- TELEPHONE
- WATER
- STORM SEWER
- SANITARY SEWER
- GAS
- BURIED ELECTRIC
- EDGE OF SAND BEACH
- EDGE OF RIPRAP
- 18" TREE WITH DIAMETER
- PAVED PARKING/PATH
- SIGN
- PARK GRILL
- BENCH
- WETLAND
- ITEMS TO BE DEMOLISHED AND PROPERLY DISPOSED OF OFF-SITE
- LIMITS OF CLEARING AND GRUBBING
- PROPOSED SAFETY FENCE

DEMO AREA LEGEND

1. REMOVE SANITARY LATERAL FROM WINNEQUAH ROAD RIGHT OF WAY TO WYE AT MAIN SEWER, CAP PIPE AT WYE. REMOVE TOP 3 FEET OF SANITARY MANHOLE, GROUT PIPE OPENINGS AND FILL REMAINING STRUCTURE WITH SAND.
2. REMOVE WATER SERVICE FROM CURB STOP IN WINNEQUAH RIGHT OF WAY TO MAIN LINE IN ROAD, CAP AT MAIN LINE.
3. REMOVE ASPHALT PATH
4A. REMOVE FENCE-DREDGING
4B. REMOVE FENCE-SEDIMENT STRUCTURES
5. REMOVE STORM SEWERS AND RELATED APPURTANCES
6. REMOVE RESTROOM BUILDING AND FOUNDATION
7. REMOVE ENTIRE TIMBER RETAINING WALL
8. REMOVE TREE

PROJECT NO.	25213134.00	DRAWN BY:	JB/KP/AHB
DRAWN:	04/08/14	CHECKED BY:	BP/MH
REVISED:	11/24/15	APPROVED BY:	

ENGINEER: SCS ENGINEERS, 2830 DAIRY DRIVE MADISON, WI 53718-6751, PHONE: (608) 224-2830

CLIENT: CITY OF MONONA, 5211 SCHLUTER ROAD, MONONA, WI 53716-2598, 608-222-2525

SITE: CITY OF MONONA SCHLUTER BEACH IMPROVEMENT PROJECT

DEMOLITION PLAN

SHEET 4

I:\25213134\Drawings-General\EXISTING.dwg, 11/24/2015 3:27:58 PM

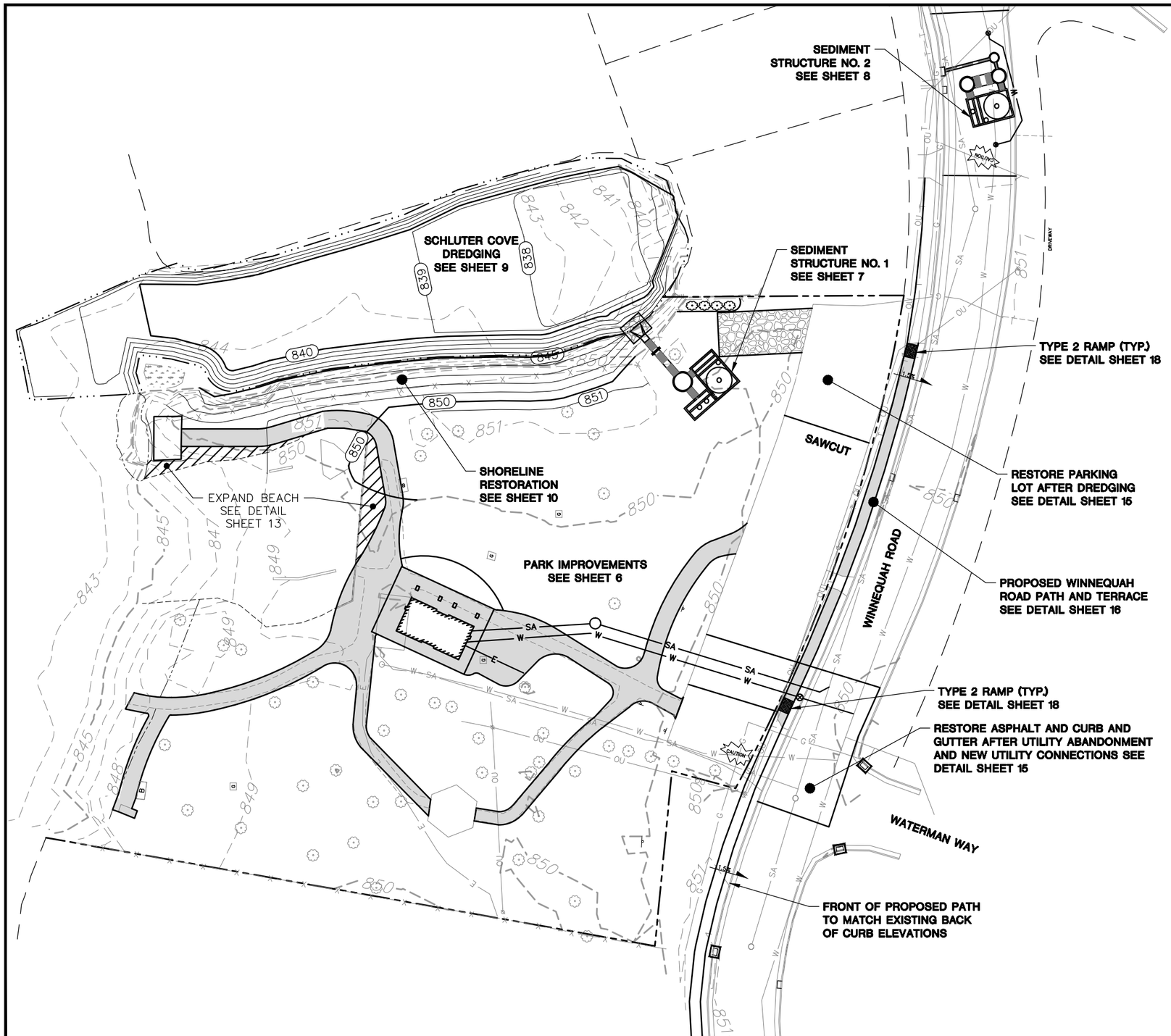

LEGEND

- PROPERTY LINE
- PARCEL LINE/RIGHT-OF-WAY
- EXISTING CONTOUR (1' INTERVAL)
- EXISTING CONTOUR (5' INTERVAL)
- EXISTING FENCE
- EXISTING PATH
- EXISTING OVERHEAD UTILITY
- EXISTING TELEPHONE
- EXISTING WATER
- EXISTING STORM SEWER
- EXISTING SANITARY SEWER
- EXISTING TREE
- EXISTING WETLAND
- PROPOSED CONTOUR (1' INTERVAL)
- PROPOSED CONTOUR (5' INTERVAL)
- PROPOSED STORM SEWER
- PROPOSED WATER
- PROPOSED SANITARY
- PROPOSED STORM MANHOLE
- PROPOSED STORM INLET
- PROPOSED CONCRETE PATH
- PROPOSED TREE
- PROPOSED BUILDING (BY OTHERS)
- PROPOSED LANDING
- PROPOSED SANITARY MANHOLE
- PROPOSED INLET PROTECTION (SEE DETAIL)
- PROPOSED BEACH AREA

NOTES:

1. SEE SHEET 3 FOR ADDITIONAL BASE MAP LEGEND.

N

50 0 50

SCALE: 1" = 50'

PROJECT NO.	25213134.00	DRAWN BY:	JB/KP/AHB	ENGINEER	SCS ENGINEERS 2830 DAIRY DRIVE MADISON, WI 53718-6751 PHONE: (608) 224-2830	CLIENT	CITY OF MONONA 5211 SCHLUTER ROAD MONONA, WI 53716-2598 608-222-2525	SITE	CITY OF MONONA SCHLUTER BEACH IMPROVEMENT PROJECT	OVERALL PROPOSED SITE PLAN	SHEET 5
DRAWN:	04/08/14	CHECKED BY:	JO								
REVISED:	11/24/15	APPROVED BY:									

I:\25213134\Drawings-General\Grading & Utility Plan_.dwg, 11/24/2015 3:30:24 PM

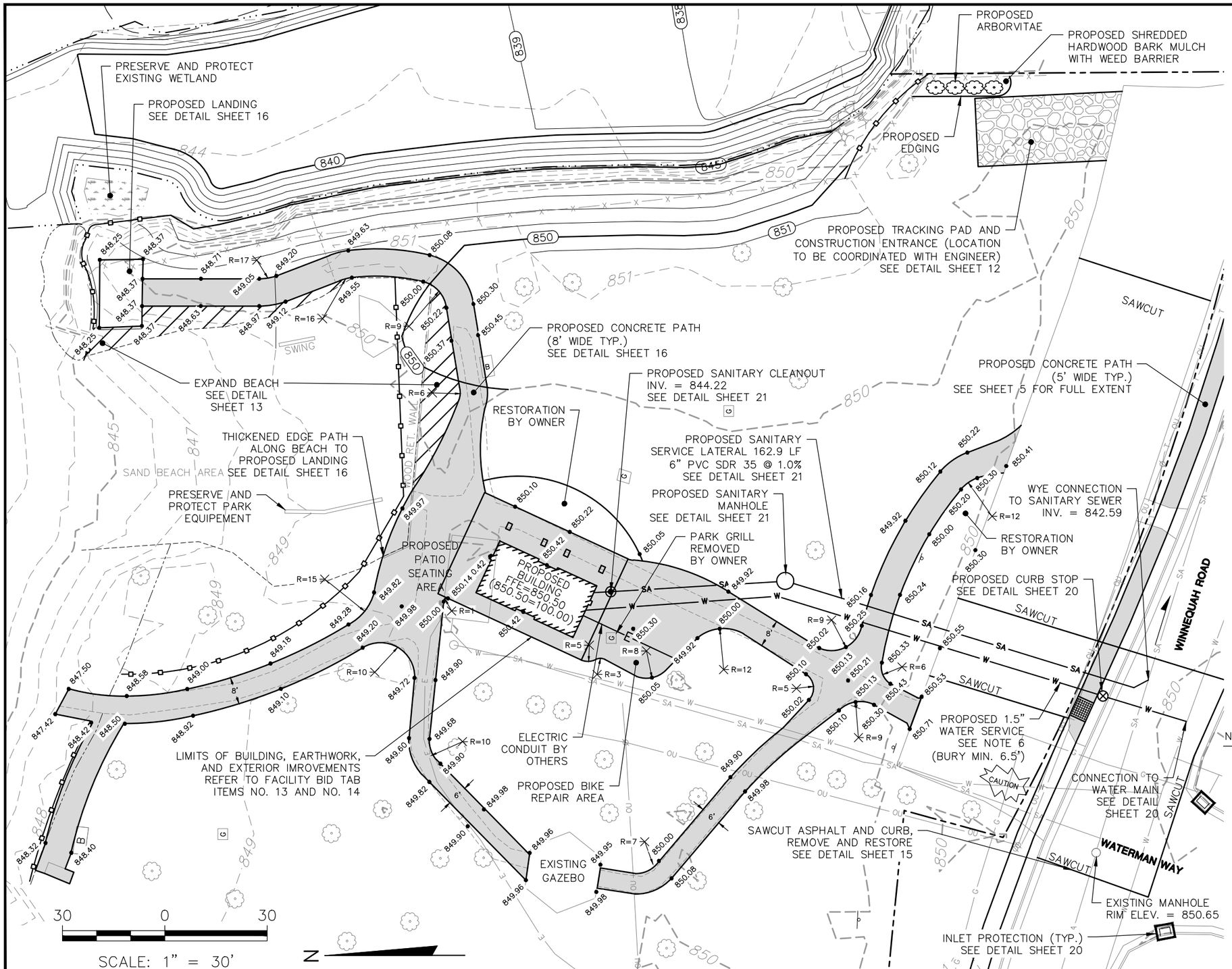

LEGEND

- PROPERTY LINE
- PARCEL LINE/RIGHT-OF-WAY
- EXISTING CONTOUR (1' INTERVAL)
- EXISTING CONTOUR (5' INTERVAL)
- EXISTING PATH
- EXISTING FENCE
- EXISTING EDGE OF BEACH SAND
- EXISTING EDGE OF RIPRAP
- EXISTING GAS
- EXISTING OVERHEAD UTILITY
- EXISTING TELEPHONE
- EXISTING WATER
- EXISTING SANITARY SEWER (WITH FLOW DIRECTION)
- EXISTING STORM SEWER
- EXISTING BURIED ELECTRIC
- EXISTING SIGN
- EXISTING WETLAND
- EXISTING TREE/VEGETATION
- PROPOSED TREE/VEGETATION
- PROPOSED CONTOUR (5' INTERVAL)
- PROPOSED CONTOUR (1' INTERVAL)
- PROPOSED PATH
- PROPOSED SILT FENCE/SILT SOCK
- PROPOSED SANITARY SERVICE LATERAL
- PROPOSED WATER SERVICE
- PROPOSED SANITARY MANHOLE
- PROPOSED SANITARY CLEANOUT
- PROPOSED CURB STOP

NOTES:

1. PATIO SEATING AREA FURNISHINGS AND BIKE REPAIR AREA EQUIPMENT TO BE INSTALLED BY OWNER.
2. COORDINATE WATER AND SANITARY LATERAL TERMINATIONS WITH BUILDING CONTRACTOR.
3. CONSTRUCT PATHS AFTER COMPLETION OF PROPOSED BUILDINGS. COORDINATE WITH BUILDING CONTRACTOR.
4. GRADE TO CREATE SMOOTH TRANSITION FROM PROPOSED PATHS TO EXISTING GROUND.
5. FILL VOIDS FROM BUILDING DEMOLITION WITH 3/4" CLEAR GRAVEL.
6. PROPOSED WATER SERVICE TO PROPOSED BUILDING SHALL BE 1.5" COPPER FROM MAIN TO CURB STOP, 1.5" HDPE SDR9 FROM CURB STOP TO BUILDING.

PROJECT NO.	25213134.00	DRAWN BY:	KP/AHB
DRAWN:	04/08/14	CHECKED BY:	BP
REVISED:	01/21/16	APPROVED BY:	

ENGINEER: SCS ENGINEERS, 2830 DAIRY DRIVE MADISON, WI 53718-6751, PHONE: (608) 224-2830

CLIENT: MONONA — CITY OF MONONA, 5211 SCHLUTER ROAD, MONONA, WI 53716-2598, 608-222-2525

SITE: CITY OF MONONA SCHLUTER BEACH IMPROVEMENT PROJECT

PARK IMPROVEMENTS

SHEET 6

I:\25213134\Drawings-General\Grading & Utility Plan_.dwg, 1/21/2016 11:52:55 AM

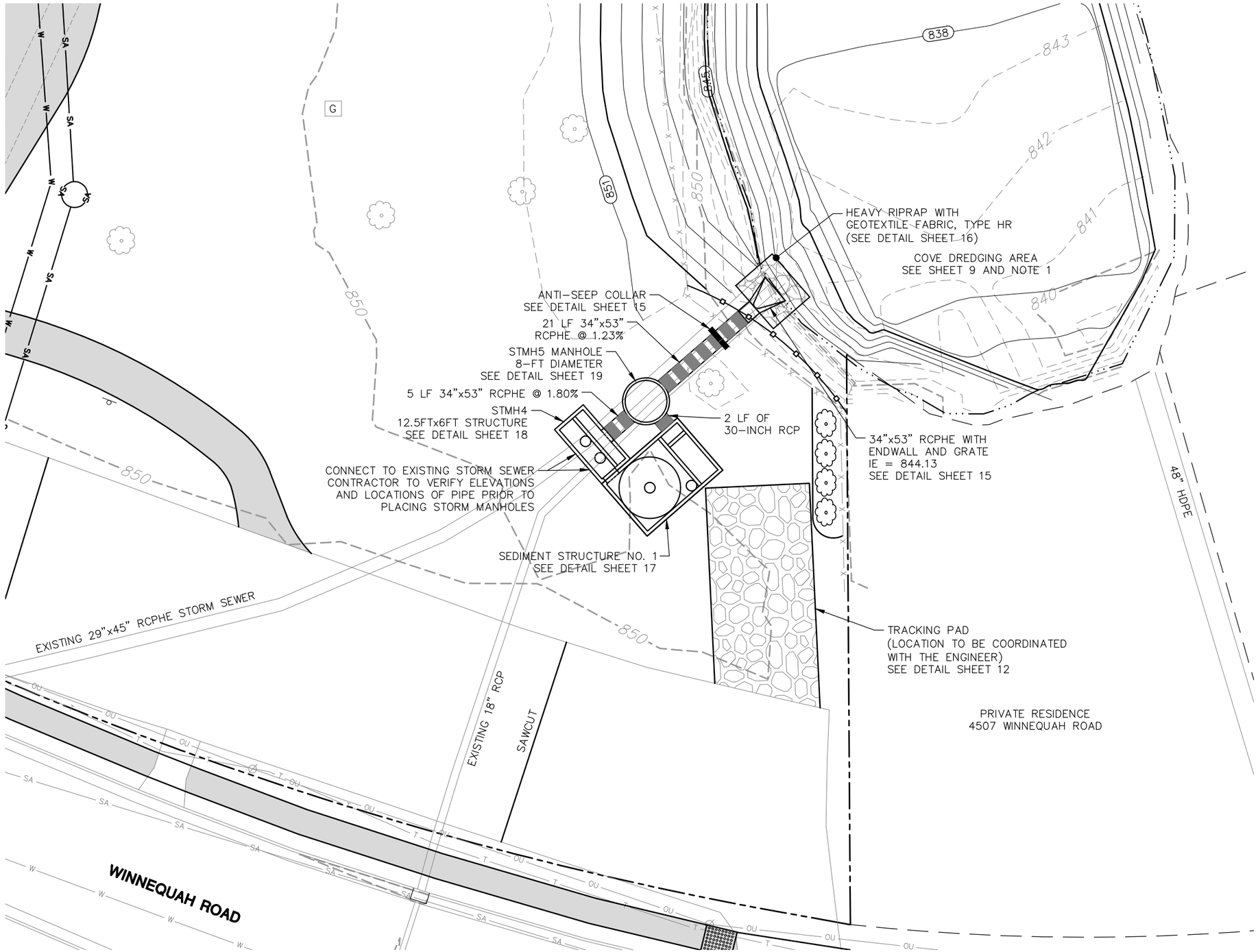

STMH4–CONCRETE STRUCTURE
SWIE = 845.72 (18" RCP)
SWIE = 844.57 (29"x45" RCPHE)
SEIE = 844.48
NEIE = 844.48
RIM = 850.00
NEENAH R–1550 W/ NON–ROCKING TYPE B LID (2)

STMH5–PRECAST CONCRETE MANHOLE (8' DIA.)
SWIE = 844.43
SEIE = 844.38
NEIE = 844.38
RIM = 850.50
NEENAH R–1550 W/ NON–ROCKING TYPE B LID

LEGEND

- PROPERTY LINE
- PARCEL LINE/RIGHT–OF–WAY
- EXISTING CONTOUR (1' INTERVAL)
- EXISTING CONTOUR (5' INTERVAL)
- EXISTING FENCE
- EXISTING OVERHEAD UTILITY
- EXISTING TELEPHONE
- EXISTING WATER
- EXISTING SANITARY
- EXISTING STORM SEWER
- PROPOSED CONTOUR (5' INTERVAL)
- PROPOSED CONTOUR (1' INTERVAL)
- PROPOSED STORM SEWER
- PROPOSED SILT FENCE/SILT SOCK
- PROPOSED TURBIDITY BARRIER
- LIMITS OF PROPOSED DREDGING

NOTES:

1. COMPLETE DREDGING PRIOR TO INSTALLING NEW DISCHARGE PIPE INTO COVE.
2. SEE DETAILS FOR MANHOLES, CASTINGS, PIPE BEDDING, AND PIPE CONNECTIONS.
3. VERIFY EXISTING INVERTS PRIOR TO ORDERING STRUCTURES.

N

20 0 20

SCALE: 1" = 20'

PROJECT NO.	25213134.00	DRAWN BY:	JB/KP/AHB
DRAWN:	04/08/14	CHECKED BY:	JO
REVISED:	01/21/16	APPROVED BY:	

ENGINEER: SCS ENGINEERS
2830 DAIRY DRIVE MADISON, WI 53718–6751
PHONE: (608) 224–2830

CLIENT: CITY OF MONONA
5211 SCHLUTER ROAD
MONONA, WI
53716–2598
608–222–2525

SITE: CITY OF MONONA
SCHLUTER BEACH IMPROVEMENT PROJECT

SEDIMENT STRUCTURE NO. 1

SHEET 7

I:\25213134\Drawings-General\Grading & Utility Plan_.dwg, 1/21/2016 11:33:17 AM

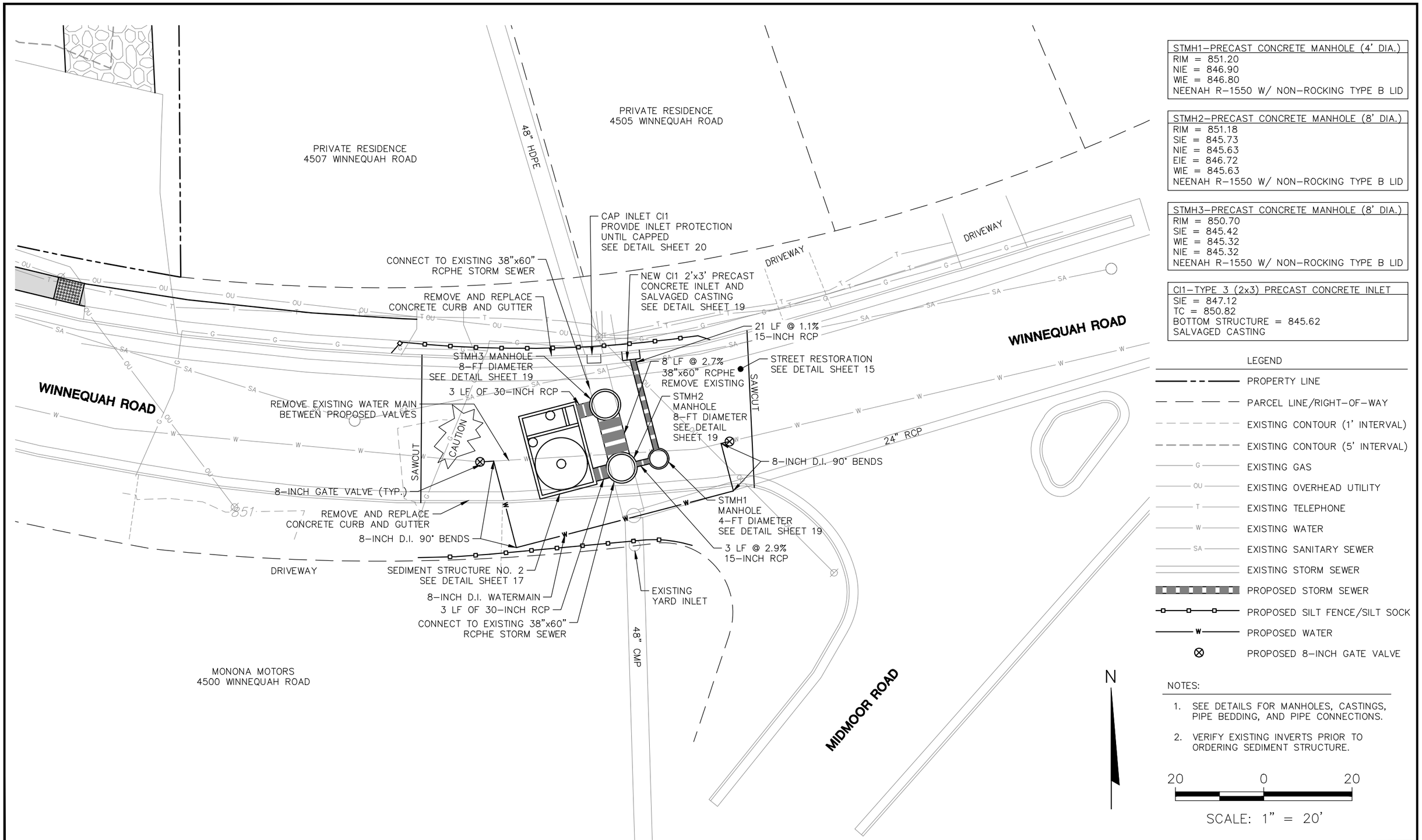

STMH1–PRECAST CONCRETE MANHOLE (4' DIA.)
RIM = 851.20
NIE = 846.90
WIE = 846.80
NEENAH R–1550 W/ NON–ROCKING TYPE B LID

STMH2–PRECAST CONCRETE MANHOLE (8' DIA.)
RIM = 851.18
SIE = 845.73
NIE = 845.63
EIE = 846.72
WIE = 845.63
NEENAH R–1550 W/ NON–ROCKING TYPE B LID

STMH3–PRECAST CONCRETE MANHOLE (8' DIA.)
RIM = 850.70
SIE = 845.42
WIE = 845.32
NIE = 845.32
NEENAH R–1550 W/ NON–ROCKING TYPE B LID

CI1–TYPE 3 (2x3) PRECAST CONCRETE INLET
SIE = 847.12
TC = 850.82
BOTTOM STRUCTURE = 845.62
SALVAGED CASTING

LEGEND

- PROPERTY LINE
- PARCEL LINE/RIGHT–OF–WAY
- EXISTING CONTOUR (1' INTERVAL)
- EXISTING CONTOUR (5' INTERVAL)
- G — EXISTING GAS
- OU — EXISTING OVERHEAD UTILITY
- T — EXISTING TELEPHONE
- W — EXISTING WATER
- SA — EXISTING SANITARY SEWER
- EXISTING STORM SEWER
- PROPOSED STORM SEWER
- PROPOSED SILT FENCE/SILT SOCK
- W — PROPOSED WATER
- ⊗ PROPOSED 8–INCH GATE VALVE

NOTES:

1. SEE DETAILS FOR MANHOLES, CASTINGS, PIPE BEDDING, AND PIPE CONNECTIONS.
2. VERIFY EXISTING INVERTS PRIOR TO ORDERING SEDIMENT STRUCTURE.

PROJECT NO.	25213134.00	DRAWN BY:	JB/KP/AHB
DRAWN:	04/08/14	CHECKED BY:	BP
REVISED:	01/21/16	APPROVED BY:	

ENGINEER: SCS ENGINEERS
2830 DAIRY DRIVE MADISON, WI 53718–6751
PHONE: (608) 224–2830

CLIENT: CITY OF MONONA
5211 SCHLUTER ROAD
MONONA, WI 53716–2598
608–222–2525

SITE: CITY OF MONONA
SCHLUTER BEACH IMPROVEMENT PROJECT

SEDIMENT STRUCTURE NO. 2

SHEET 8

I:\25213134\Drawings-General\Grading & Utility Plan_.dwg, 1/21/2016 11:33:37 AM

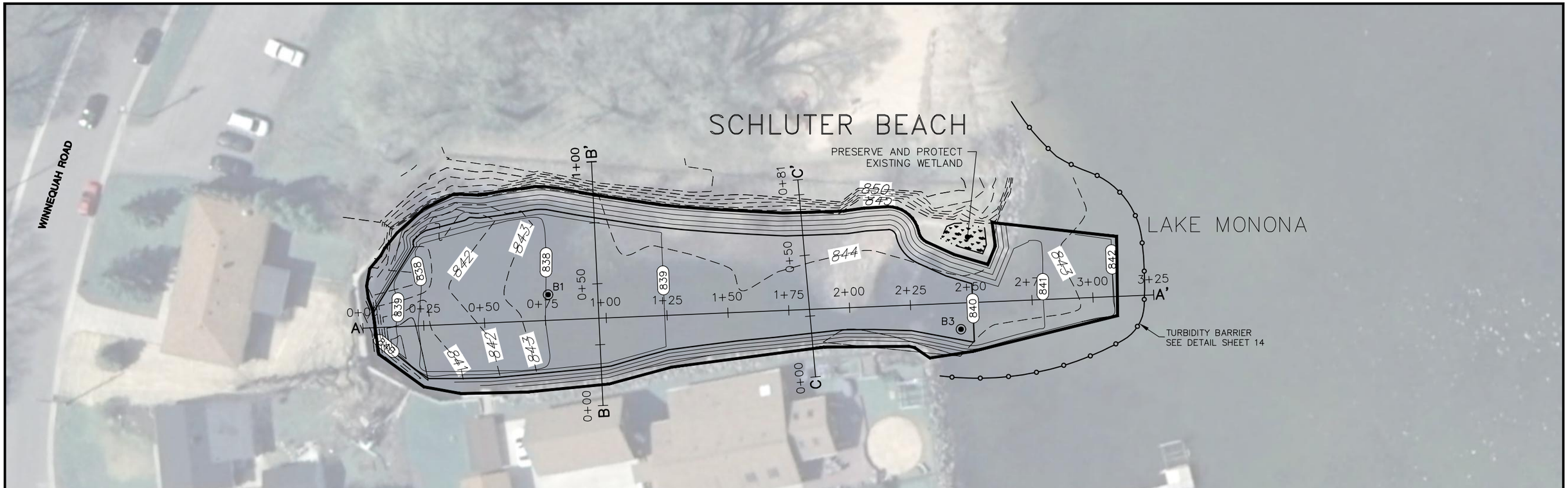

NOTE:

1. DATA PROVIDED WAS COLLECTED BY SCS ENGINEERS ON JULY 17, 2013. INFORMATION COLLECTED AND PROVIDED SHALL BE FOR REFERENCE ONLY.

LAKE MONONA TARGET WATER LEVELS:

844.7 (SUMMER MIN.)
845.2 (TARGET MAX)
847.7 (100-YEAR)

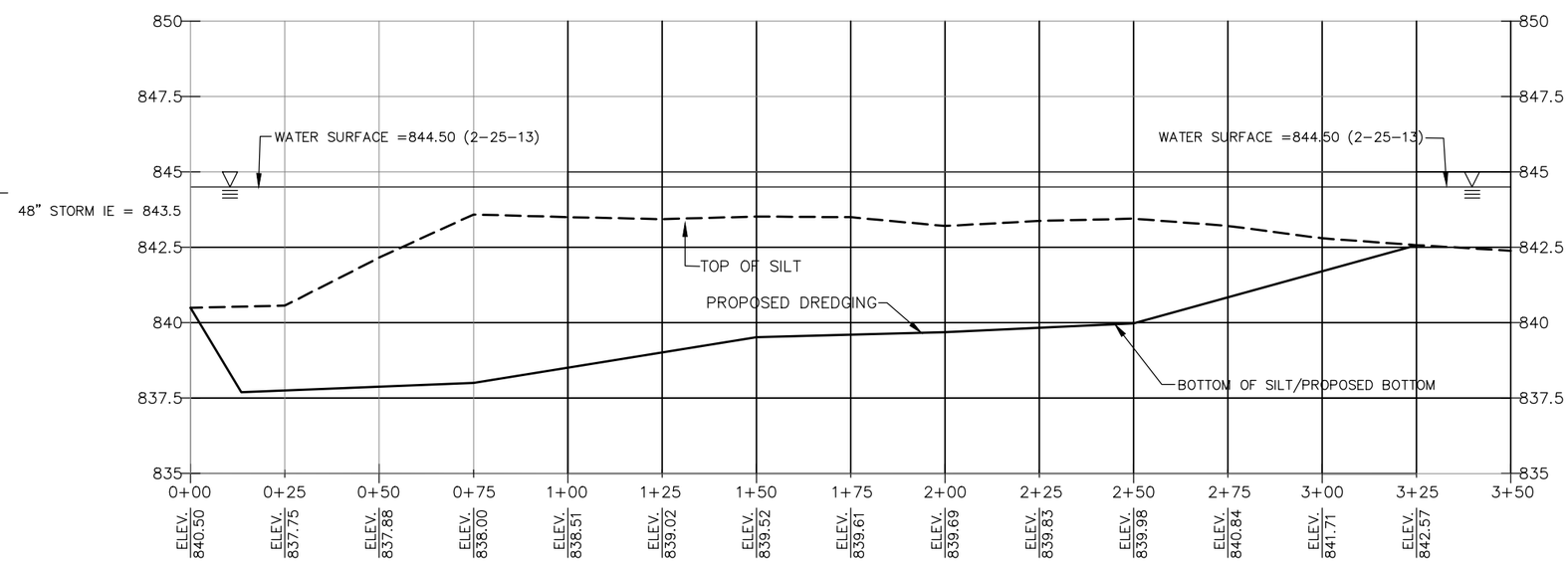

DREDGE PLAN CROSS SECTION A-A'

SEE DETAIL SHEET 13 FOR CROSS SECTIONS B-B' AND C-C'

N

LEGEND

- 843 — EXISTING CONTOUR
- 842 — PROPOSED CONTOUR
- PROPOSED TURBIDITY BARRIER
- B1 — APPROXIMATE SEDIMENT SAMPLE LOCATION AND NUMBER
- PROPOSED DREDGING LIMITS

40 0 40

SCALE: 1" = 40'

PROJECT NO.	25213134.00	DRAWN BY:	BS/AHB
DRAWN:	02/26/13	CHECKED BY:	BP
REVISED:	01/21/16	APPROVED BY:	

ENGINEER: SCS ENGINEERS, 2830 DAIRY DRIVE MADISON, WI 53718-6751, PHONE: (608) 224-2830

CLIENT: CITY OF MONONA, 5211 SCHLUTER ROAD, MONONA, WI 53716-2598, 608-222-2525

SITE: CITY OF MONONA, SCHLUTER BEACH IMPROVEMENT PROJECT

SCHLUTER COVE DREDGING PLAN AND PROFILE

SHEET 9

I:\25213134\Drawings-General\Dredge Plan_11-19-15.dwg, 1/21/2016 10:45:53 AM

LEGEND

- PROPERTY LINE
- PARCEL LINE/RIGHT-OF-WAY
- EXISTING CONTOUR (1' INTERVAL)
- EXISTING CONTOUR (5' INTERVAL)
- EXISTING GAS
- EXISTING OVERHEAD UTILITY
- EXISTING TELEPHONE
- EXISTING WATER
- EXISTING STORM SEWER
- PROPOSED STORM SEWER
- PROPOSED SILT FENCE/SILT SOCK
- PROPOSED TURBIDITY BARRIER
- PROPOSED TREE
- EXISTING TREE
- PROPOSED CONTOUR (1' INTERVAL)
- PROPOSED CONTOUR (5' INTERVAL)
- EDGE OF BEACH SAND
- PROPOSED LIMITS OF DREDGING
- PROPOSED PATH
- PROPOSED NATIVE VEGETATIVE MAT
- DELINEATED WETLAND

NOTES:

1. INSTALL AND MAINTAIN TURBIDITY BARRIER AS SHOWN ON SHEET 9 UNTIL DREDGING AND SHORELINE RESTORATION ACTIVITIES ARE COMPLETE AND STABILIZED.

N

20 0 20

SCALE: 1" = 20'

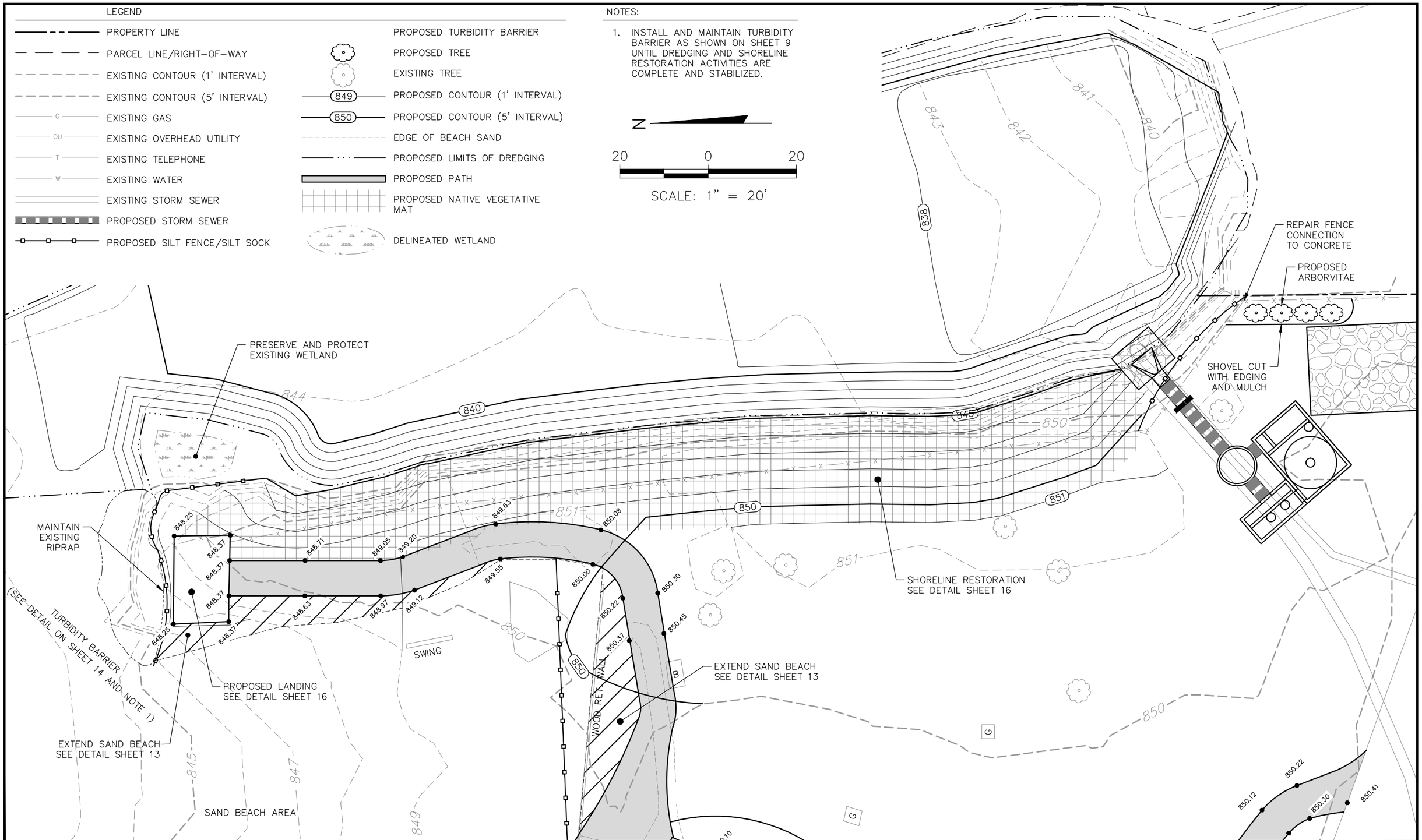

PROJECT NO.	25213134.00	DRAWN BY:	JB/KP/AHB	ENGINEER	SCS ENGINEERS 2830 DAIRY DRIVE MADISON, WI 53718-6751 PHONE: (608) 224-2830	CLIENT	CITY OF MONONA 5211 SCHLUTER ROAD MONONA, WI 53716-2598 608-222-2525	SITE	CITY OF MONONA SCHLUTER BEACH IMPROVEMENT PROJECT	SHORELINE RESTORATION	SHEET 10
DRAWN:	04/08/14	CHECKED BY:	BP								
REVISED:	01/21/16	APPROVED BY:									

I:\25213134\Drawings-General\Grading & Utility Plan_.dwg, 1/21/2016 10:46:44 AM

NOTES:

1. DETOUR SHALL ONLY BE ALLOWED FROM 8 AM TO 5 PM MONDAY THROUGH FRIDAY.
2. MAINTAIN ACCESS TO BUSINESSES THROUGHOUT CONSTRUCTION.
3. THE EXACT NUMBER, LOCATION AND SPACING OF ALL SIGNS AND TRAFFIC CONTROL DEVICES SHALL BE ADJUSTED TO FIELD CONDITIONS AS DIRECTED BY THE ENGINEER.
4. SIGN LAYOUTS SHALL BE IN ACCORDANCE WITH THE FEDERAL HIGHWAY ADMINISTRATION MANUAL OF STANDARD HIGHWAY SIGNS, WMUTCD AND ANY OTHER LOCAL ORDINANCES.
5. REMOVE SIGNS DURING "MOVING OPERATIONS TRAFFIC CONTROL" AND REPLACE WHEN WORK UNDER "MOVING OPERATIONS TRAFFIC CONTROL" IS COMPLETED.
6. DETAILS OF TRAFFIC CONTROL DEVICES AND INSTALLATION NOT SHOWN ON THESE DRAWING SHALL CONFORM TO THE PERTINENT REQUIREMENTS OF THE STANDARD SPECIFICATIONS. THE SPECIAL PROVISIONS, AND THE MANUAL ON UNIFORM TRAFFIC CONTROL DEVICES.
7. THE FIRST ADVANCE WARNING SIGN SHOULD TYPICALLY BE LOCATED IN ADVANCE OF THE ANTICIPATED TRAFFIC BACKUP OR QUEUE.
8. WHEN A SIDE ROAD OR RAMP INTERSECTS THE FACILITY ON WHICH THE WORK IS BEING PERFORMED, ADDITIONAL TRAFFIC CONTROLS SHALL BE PROVIDED AS SPECIFIED IN THE PLANS AND/OR THE SPECIAL PROVISIONS OR AS DIRECTED BY THE ENGINEER.
9. TRAFFIC DRUMS WITH WARNING LIGHTS SHALL BE PROVIDED BY CONTRACTOR. DRUM AND LIGHTS SHALL BE USED TO PROTECT THE WORK ZONE. PLACEMENT TO BE DETERMINED IN THE FIELD BY THE CONTRACTOR OR AS DIRECTED BY THE ENGINEER. INCIDENTAL TO TRAFFIC CONTROL.
10. (W20-1) ROAD WORK AHEAD SIGNS SHALL BE USED FROM 5 PM TO 8 AM
11. WINNEQUAH ROAD SHALL BE OPEN BETWEEN JULY 3 – JULY 5, 2016

LEGEND

TYPE III BARRICADE W/ 2-TYPE A WARNING LIGHTS

POST MOUNTED TRAFFIC CONTROL SIGN

TYPE III BARRICADE W/ 2-TYPE A WARNING LIGHTS AND TRAFFIC CONTROL SIGN

(6) ROAD CLOSED TO THRU TRAFFIC — R11-4 60"X30"

(7) ROAD CLOSED — R11-2 48"X30"

(5) ROAD CLOSED AHEAD — W20-3 36"X36"

(10) ROAD WORK AHEAD — W20-1 36"X36"

PROJECT NO.	25213134.00	DRAWN BY:	KP
DRAWN:	06/16/14	CHECKED BY:	BP
REVISED:	11/23/15	APPROVED BY:	

ENGINEER: SCS ENGINEERS, 2830 DAIRY DRIVE MADISON, WI 53718-6751, PHONE: (608) 224-2830

CLIENT: CITY OF MONONA, 5211 SCHLUTER ROAD, MONONA, WI 53716-2598, 608-222-2525

SITE: CITY OF MONONA SCHLUTER BEACH IMPROVEMENT PROJECT

TRAFFIC CONTROL PLAN

SHEET 11

I:\25213134\Drawings-General\Schluter Beach Traffic Control Plan.dwg, 11/24/2015 4:08:05 PM

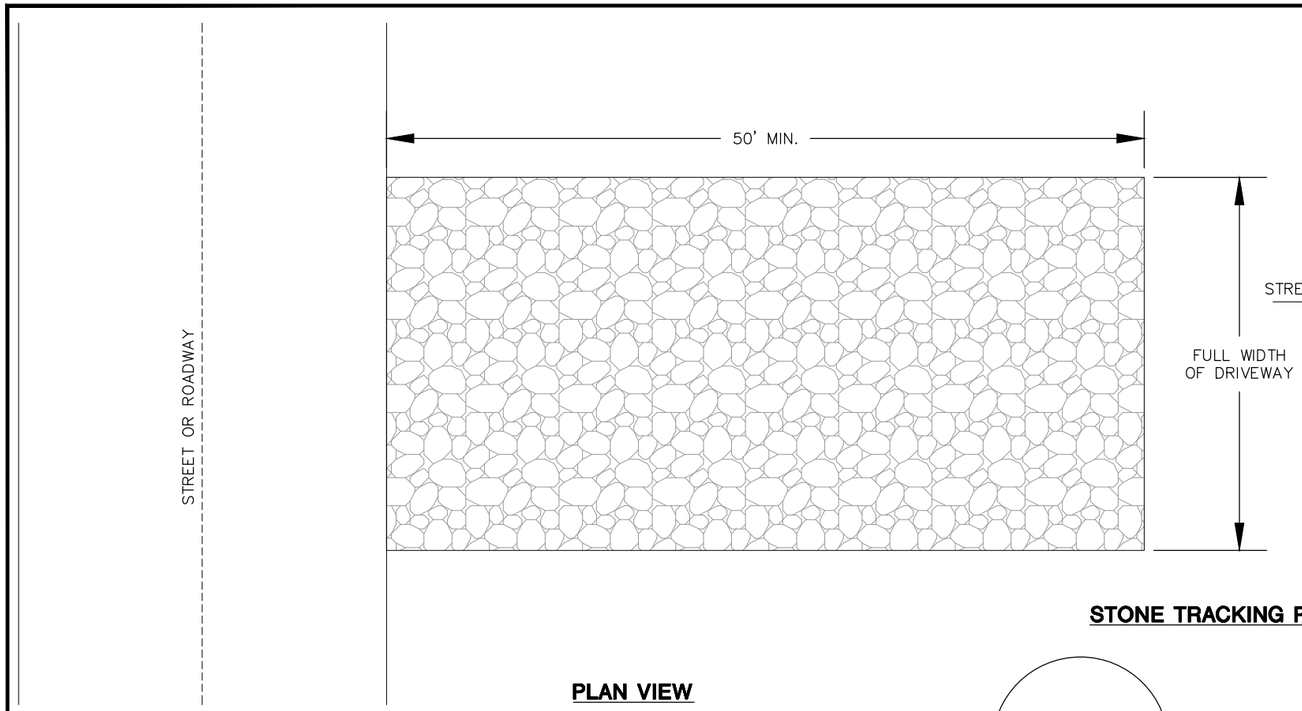

PLAN VIEW

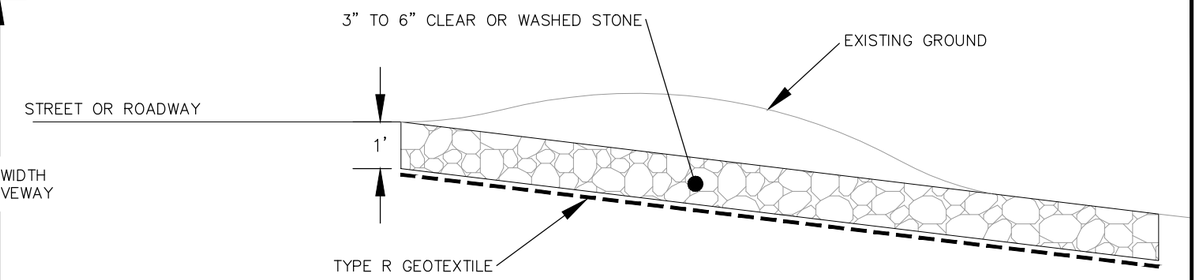

SECTION VIEW

STONE TRACKING PAD

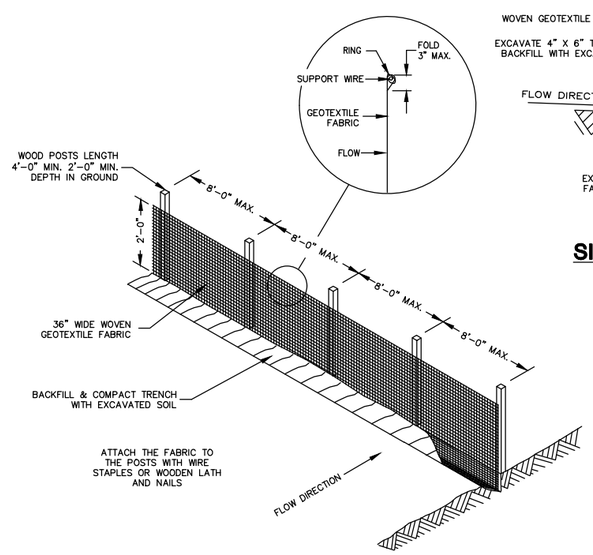

SILT FENCE

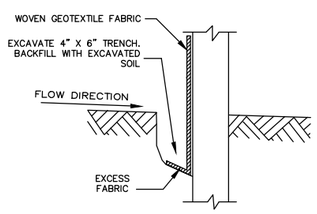

SILT FENCE TRENCH

NOTE:

SILT SOCK MAY BE USED IN PLACE OF SILT FENCE.

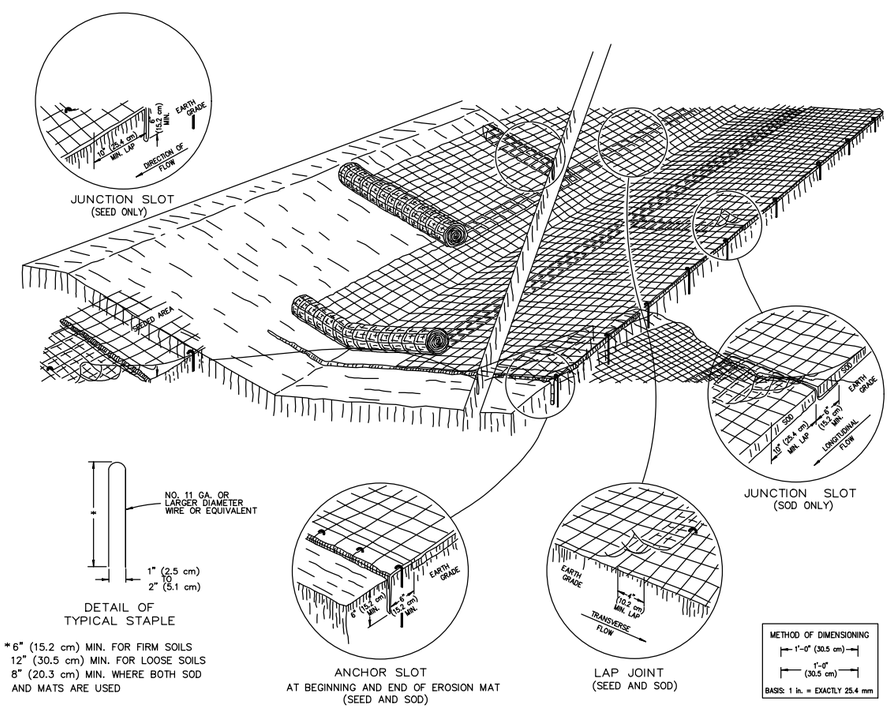

EROSION MAT

GENERAL NOTES

DETAILS OF CONSTRUCTION, MATERIALS AND WORKMANSHIP NOT SHOWN ON THIS DRAWING SHALL CONFIRM TO THE PERTINENT REQUIREMENTS OF THE SPECIFICATIONS

VARIATIONS IN THE DIMENSIONS OR MATERIALS SHOWN HEREON SHALL BE PERTINENT IF THEY PROVIDE EQUIVALENT PROTECTION AND MATERIAL STRENGTH AND IF PRIOR APPROVAL OF THE ENGINEER IS OBTAINED

LAP JOINTS SHALL NOT BE PLACED IN THE BOTTOM OF V-SHAPED DITCHES.

JUNCTION SLOTS ON ADJACENT STRIPS OF MATTING SHALL BE STAGGERED A MINIMUM OF 4 FEET (1.219 m) APART.

EDGES OF THE EROSION MAT SHALL BE IMPRESSED IN THE SOIL.

EROSION MAT WILL BE MEASURED AND PAID FOR IN ACCORD-ANCE WITH THE SPECIFICATIONS.

EROSION MAT OVER SOD

a. ONLY JUTE FABRIC WILL BE PERMITTED OVER SOD.
b. WOOD STAKES FOR SOD MAY BE OMITTED BY THE ENGINEER IF THE EXISTING SLOPE AND SOIL CONDITIONS SO WARRANT.
c. THE WIDTH OF THE EROSION MAT SHALL ALWAYS EQUAL THE SOD WIDTH.
d. SOD STRIPS MAY BE PLACED EITHER LONGITUDINALLY OR TRANSVERSELY TO THE FLOW LINE OF THE DITCH.

EROSION MAT OVER SEEDING

JUNCTION OR ANCHOR SLOTS SHALL BE AT MINIMUM INTERVALS OF 100 FEET (30.48 m) ON GRADES UP TO AND INCLUDING 3 PERCENT, AND 50 FEET (15.24 m) ON GRADES EXCEEDING 3 PERCENT.

PROJECT NO.	25213134.00	DRAWN BY:	KP	ENGINEER	SCS ENGINEERS 2830 DAIRY DRIVE MADISON, WI 53718-6751 PHONE: (608) 224-2830	CLIENT	CITY OF MONONA 5211 SCHLUTER ROAD MONONA, WI 53716-2598 608-222-2525	SITE	CITY OF MONONA SCHLUTER BEACH IMPROVEMENT PROJECT
DRAWN:	06/10/14	CHECKED BY:	BP						DETAILS EROSION CONTROL
REVISED:	01/19/15	APPROVED BY:							SHEET 12

I:\25213134\Drawings-General\Details.dwg, 11/24/2015 4:09:12 PM

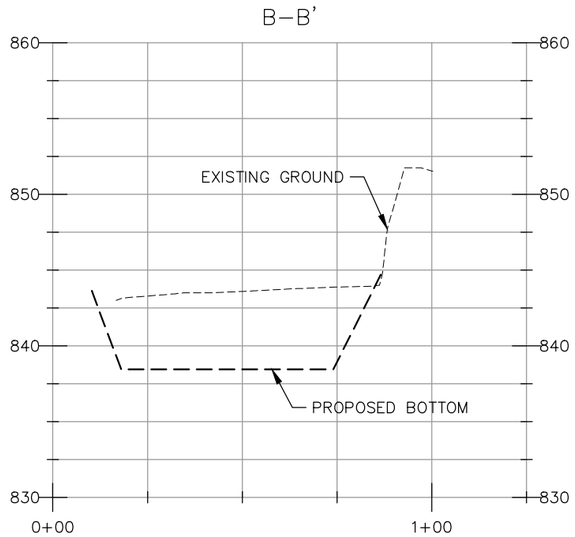

DREDGE PLAN - CROSS SECTION B-B'

HORIZONTAL SCALE: 1" = 40'
VERTICAL SCALE: 1" = 10'
VERTICAL EXAGGERATION = 4X

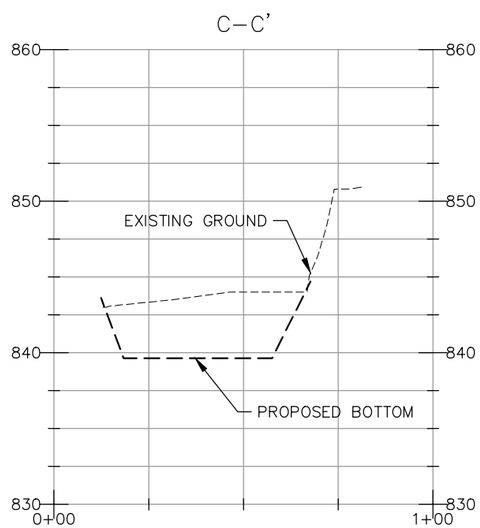

DREDGE PLAN - CROSS SECTION C-C'

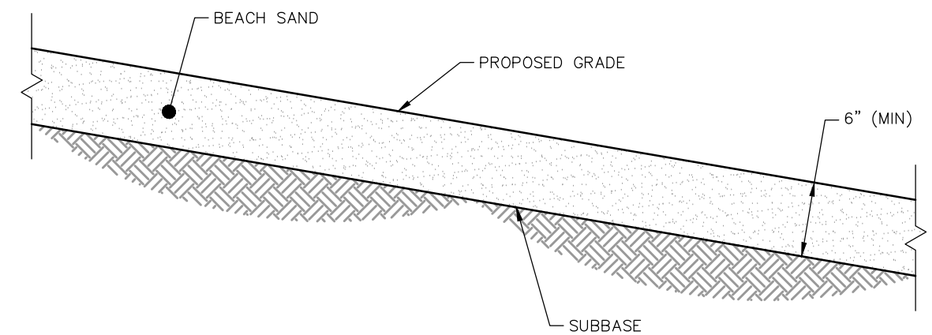

EXPAND SAND BEACH TYPICAL SECTION

PROJECT NO.	25213134.00	DRAWN BY:	KP	ENGINEER	SCS ENGINEERS 2830 DAIRY DRIVE MADISON, WI 53718–6751 PHONE: (608) 224–2830	CLIENT	CITY OF MONONA 5211 SCHLUTER ROAD MONONA, WI 53716–2598 608–222–2525	SITE	CITY OF MONONA SCHLUTER BEACH IMPROVEMENT PROJECT	DETAILS SAND BEACH AND DREDGING CROSS SECTIONS	SHEET 13
DRAWN:	06/10/14	CHECKED BY:	BP								
REVISED:	11/24/15	APPROVED BY:									

I:\25213134\Drawings-General\Details.dwg, 11/24/2015 4:10:16 PM

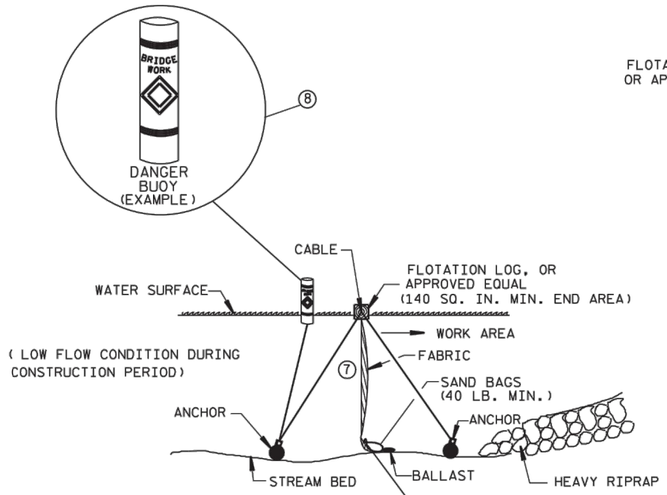

SECTION B-B

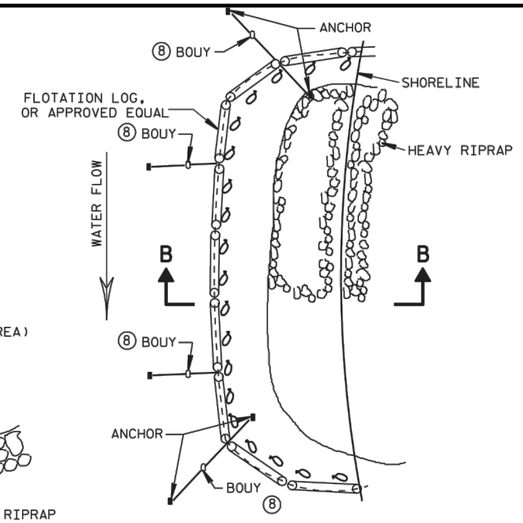

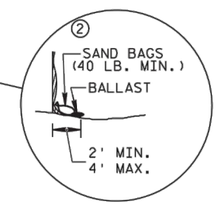

TURBIDITY BARRIER FLOAT ALTERNATIVE
CAUTION - SEE NOTE 6

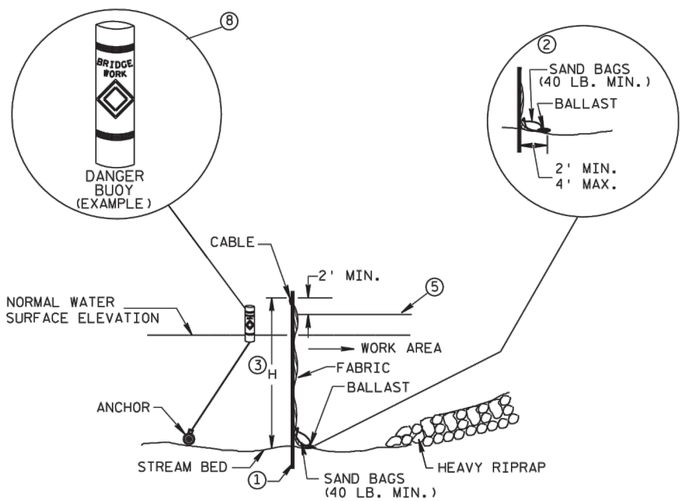

SECTION A-A

TURBIDITY BARRIER STANDARD POST INSTALLATION

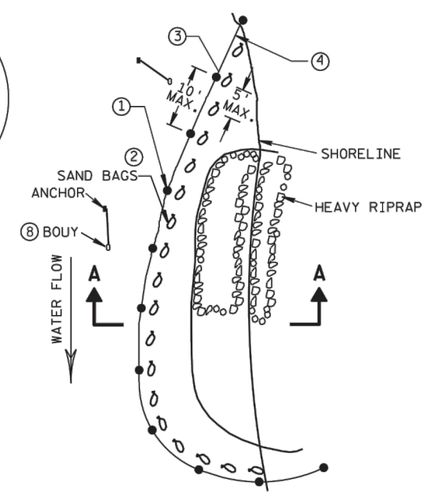

PLAN VIEW

TURBIDITY BARRIER PLACEMENT DETAILS

GENERAL NOTES

DETAILS OF CONSTRUCTION, MATERIALS AND WORKMANSHIP NOT SHOWN ON THIS DRAWING SHALL CONFORM TO THE PERTINENT REQUIREMENTS OF THE STANDARD SPECIFICATIONS AND THE APPLICABLE SPECIAL PROVISIONS.

TURBIDITY BARRIER MAY BE REMOVED AT THE ENGINEERS DISCRETION, WHEN PERMANENT EROSION CONTROL MEASURES HAVE BEEN ESTABLISHED.

① DRIVEN STEEL POSTS, PIPES, OR CHANNELS. LENGTH SHALL BE SUFFICIENT TO SECURELY SUPPORT BARRIER AT HIGH WATER ELEVATIONS.

② SANDBAGS TO BE USED AS ADDITIONAL BALLAST WHEN ORDERED BY THE ENGINEER TO MEET ADVERSE FIELD CONDITIONS. SPACE AS APPROPRIATE FOR SITE CONDITIONS.

③ WHEN BARRIER HEIGHT, H, EXCEEDS 8 FT., POST SPACING MAY NEED TO BE DECREASED.

④ IN WATERWAYS SUBJECT TO FLUCTUATING WATER ELEVATIONS, PROVISIONS SHOULD BE MADE TO ALLOW THE WATER TO EQUALIZE ON EACH SIDE OF THE BARRIER. THIS MAY BE ACCOMPLISHED BY LEAVING A PORTION OF THE BARRIER OPEN ON THE UPSTREAM END.

⑤ ESTIMATED HIGH WATER ELEVATION DURING CONSTRUCTION PERIOD. MIMIMUM BARRIER HEIGHT SHALL BE 2'GREATER THAN EITHER THE Q2 ELEVATION OR THE ESTIMATED HIGH WATER ELEVATION DURING CONSTRUCTION, WICHEVER IS GREATER.

⑥ FLOAT ALTERNATIVE WILL ONLY BE ALLOWED WITH WRITTEN APPROVAL OF THE ENGINEER, AND IS MEANT FOR LOCATIONS WHERE BED ROCK PREVENTS THE INSTALLATION OF POSTS.

⑦ ALLOW SUFFICIENT SLACK VERTICALLY AND HORIZONTALLY SO THAT SEDIMENT BUILD UP WILL NOT SEPARATE OR LOWER THE TURBIDITY BARRIER.

⑧ USE AS DIRECTED BY COAST GUARD OR DNR PERMIT WHEN WORKING IN NAVIGABLE WATERWAYS.

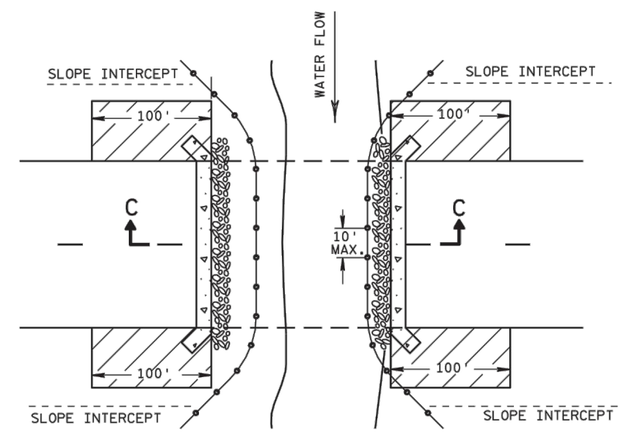

PLAN VIEW

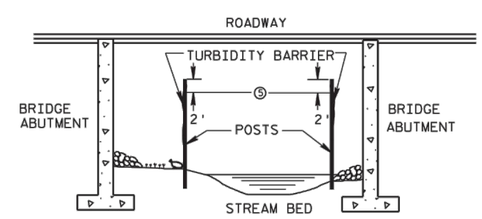

SECTION C-C

TURBIDITY BARRIER DETAIL SHOWING TYPICAL PLACEMENT AT STRUCTURES

PROJECT NO.	25213134.00	DRAWN BY:	KP	ENGINEER	SCS ENGINEERS 2830 DAIRY DRIVE MADISON, WI 53718-6751 PHONE: (608) 224-2830	CLIENT	CITY OF MONONA 5211 SCHLUTER ROAD MONONA, WI 53716-2598 608-222-2525	SITE	CITY OF MONONA SCHLUTER BEACH IMPROVEMENT PROJECT	DETAILS TURBIDITY BARRIER	SHEET
DRAWN:	06/10/14	CHECKED BY:	BP								14
REVISED:	12/17/14	APPROVED BY:									

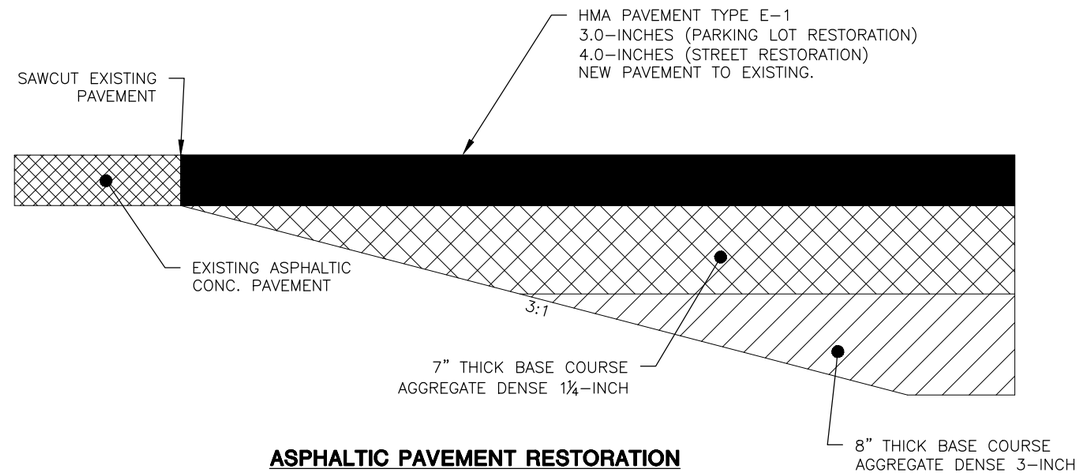

ASPHALTIC PAVEMENT RESTORATION

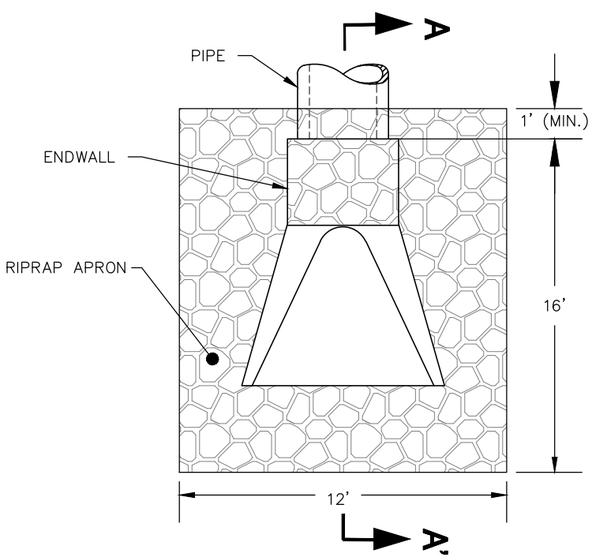

PLAN VIEW

NOTE:
ENDWALL: PRECAST REINFORCED CONCRETE ENDWALL BY COUNTY MATERIALS (OR APPROVED EQUIVALENT)

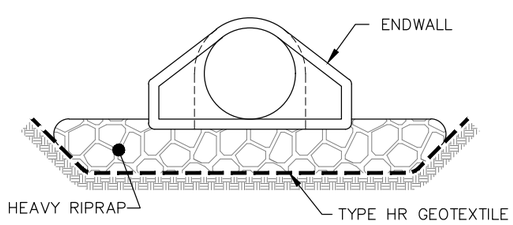

END ELEVATION

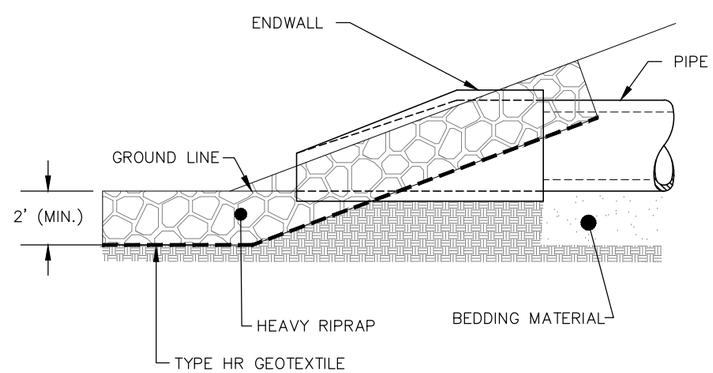

CULVERT ENDWALL SECTION A-A'

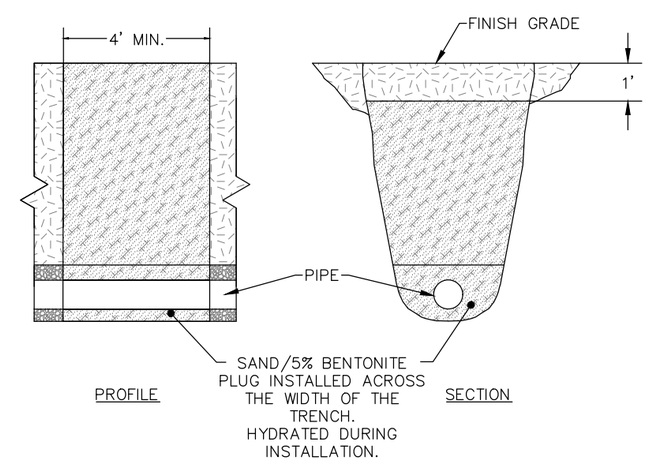

ANTI-SEEP COLLAR

CULVERT ENDWALL AND RIPRAP OUTLET PROTECTION

PROJECT NO.	25213134.00	DRAWN BY:	KP	ENGINEER	SCS ENGINEERS 2830 DAIRY DRIVE MADISON, WI 53718-6751 PHONE: (608) 224-2830	CLIENT	CITY OF MONONA 5211 SCHLUTER ROAD MONONA, WI 53716-2598 608-222-2525	SITE	CITY OF MONONA SCHLUTER BEACH IMPROVEMENT PROJECT	DETAILS STORM AND RESTORATION	SHEET 15
DRAWN:	06/16/14	CHECKED BY:	BP								
REVISED:	06/16/15	APPROVED BY:									

I:\25213134\Drawings-General\Detail-Restoration.dwg, 11/24/2015 4:11:35 PM

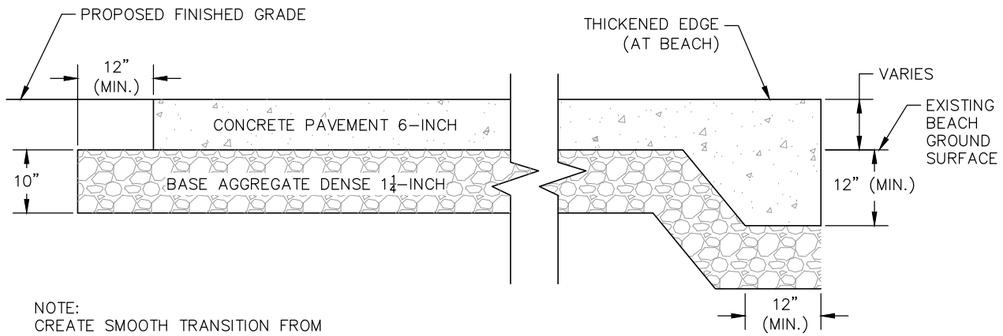

NOTE:
CREATE SMOOTH TRANSITION FROM PATH/LANDING TO EXISTING GROUND SURFACE.

CONCRETE PATH/LANDING

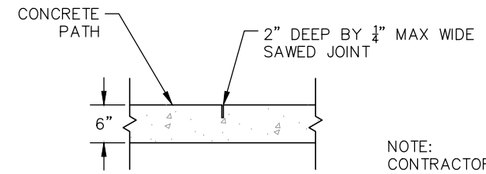

NOTE:
CONTRACTOR TO PROVIDE JOINT PATTERN PLAN IN ACCORDANCE WITH SHEET 2-CONSTRUCTION NOTES.

CONCRETE CONTROL JOINT

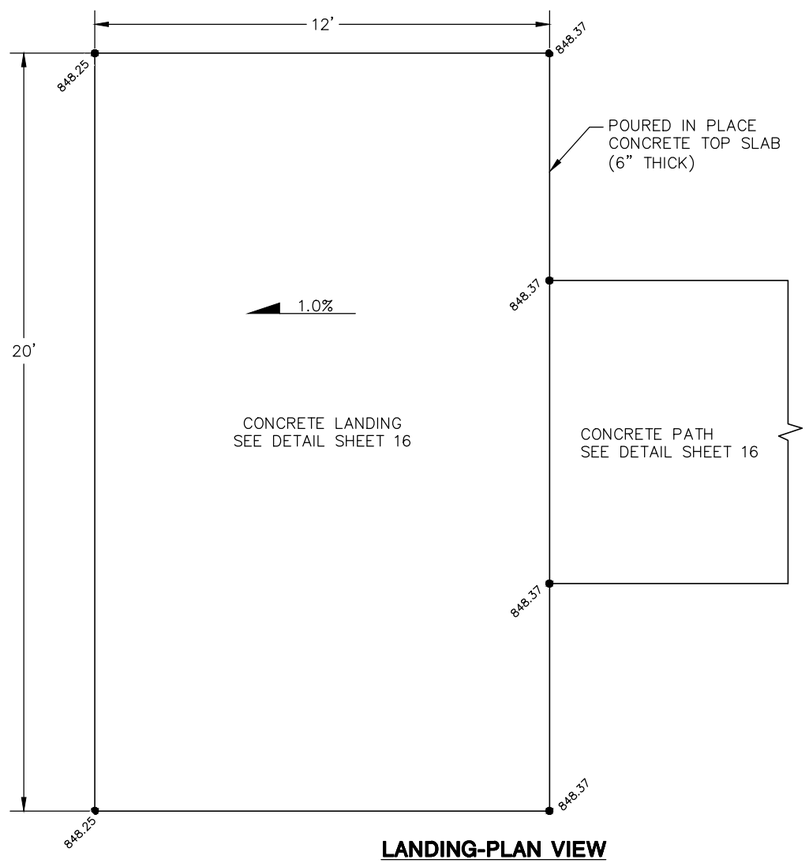

LANDING-PLAN VIEW

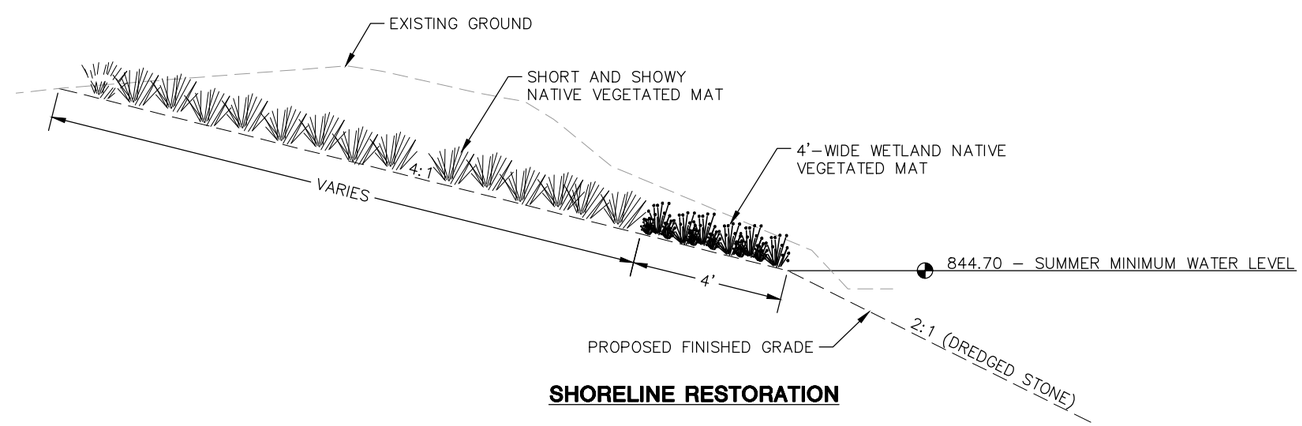

SHORELINE RESTORATION

PROJECT NO.	25213134.00	DRAWN BY:	KP/AHB
DRAWN:	06/16/14	CHECKED BY:	BP
REVISED:	01/15/16	APPROVED BY:	

ENGINEER: SCS ENGINEERS, 2830 DAIRY DRIVE MADISON, WI 53718-6751, PHONE: (608) 224-2830

CLIENT: CITY OF MONONA, 5211 SCHLUTER ROAD, MONONA, WI 53716-2598, 608-222-2525

SITE: CITY OF MONONA SCHLUTER BEACH IMPROVEMENT PROJECT

DETAILS RESTORATION

SHEET 16

I:\25213134\Drawings-General\16_Detail-Restoration.dwg, 1/21/2016 11:52:38 AM

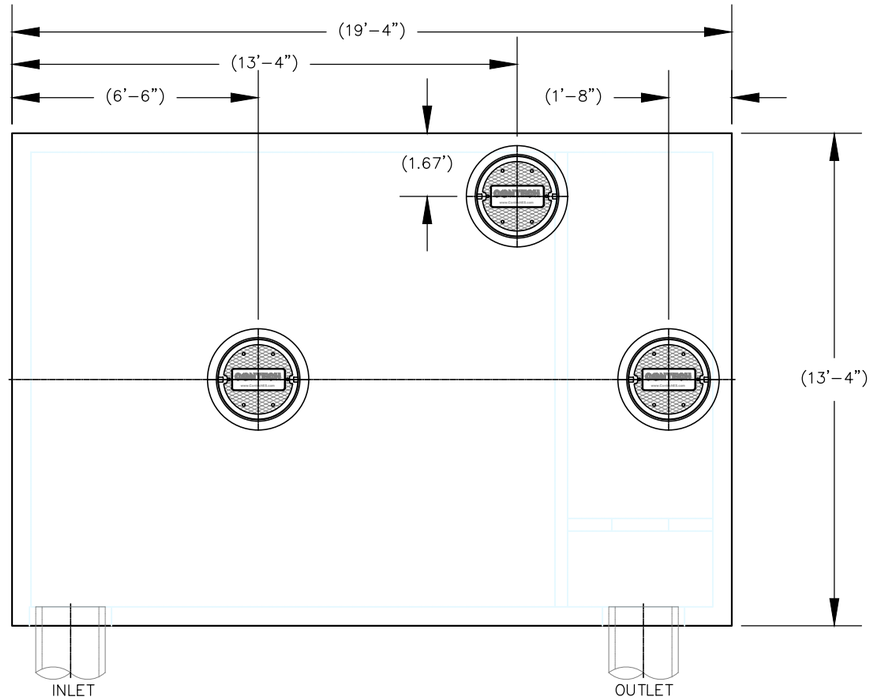

PLAN VIEW

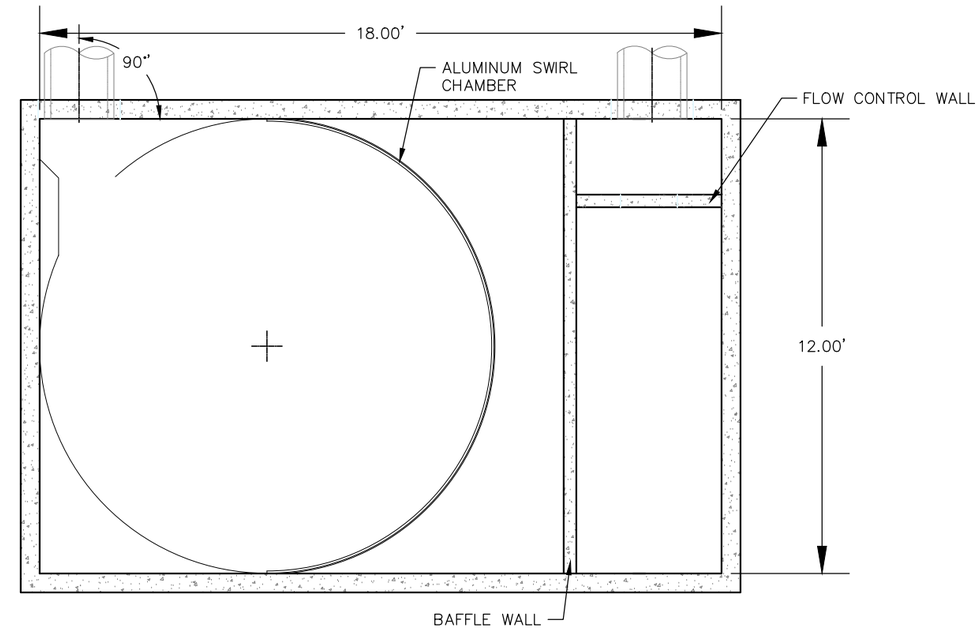

SECTION B-B

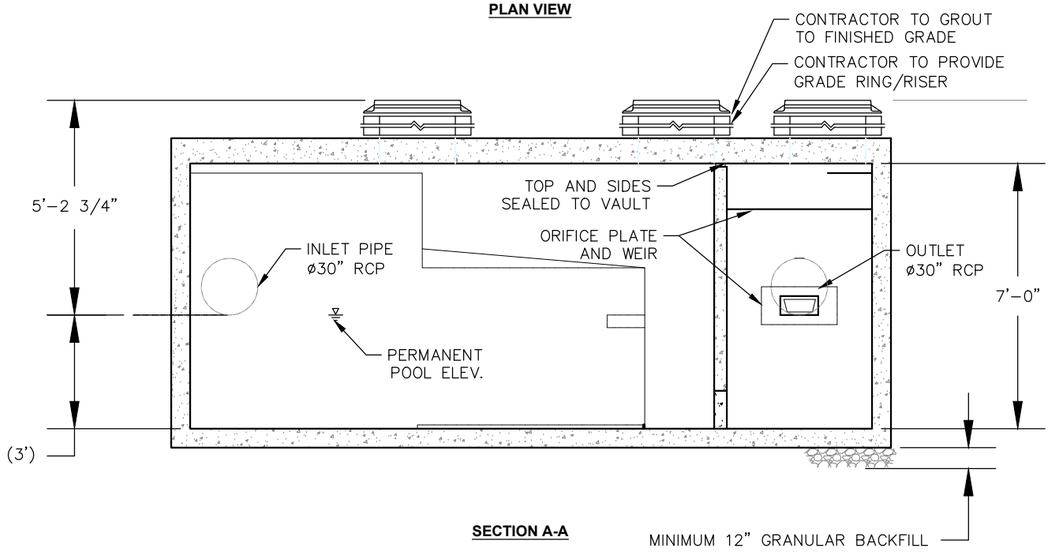

SECTION A-A

MATERIALS LIST – PROVIDED BY CONTECH

COUNT	DESCRIPTION	INSTALLED BY
1	ALUMINUM SWIRL CHAMBER	CONTECH
1	ALUMINUM WEIR PLATE	CONTECH
1	ALUMINUM ORIFICE PLATE	CONTECH
1	SWIRL CHAMBER SEALANT	CONTECH
1	SEALANT FOR JOINTS	CONTRACTOR
3	ø24" x 4" FRAME AND COVER	CONTRACTOR

SECTION B-B

GENERAL NOTES

1. CONTECH TO PROVIDE ALL MATERIALS UNLESS NOTED OTHERWISE.
2. DIMENSIONS MARKED WITH ( ) ARE REFERENCE DIMENSIONS. ACTUAL DIMENSIONS MAY VARY.
3. FOR FABRICATION DRAWINGS WITH DETAILED VAULT DIMENSIONS AND WEIGHT, PLEASE CONTACT YOUR CONTECH ENGINEERED SOLUTIONS LLC REPRESENTATIVE. www.ContechES.com
4. VORTECHS WATER QUALITY VAULT SHALL BE IN ACCORDANCE WITH ALL DESIGN DATA AND INFORMATION CONTAINED IN THIS DRAWING.
5. STRUCTURE SHALL MEET AASHTO HS20 AND CASTINGS SHALL MEET AASHTO M306 LOAD RATING, ASSUMING EARTH COVER OF 0' – 5', AND GROUNDWATER ELEVATION AT, OR BELOW, THE OUTLET PIPE INVERT ELEVATION. CONFIRM ACTUAL GROUNDWATER ELEVATION.
6. WATER SURFACE ELEVATION IN THE VORTECHS SYSTEM IS EXPECTED TO BE AT OR BELOW TOP OF FLOW CONTROL WALL DURING THE DESIGN STORM.

INSTALLATION NOTES

1. CONTRACTOR TO PROVIDE EQUIPMENT WITH SUFFICIENT LIFTING AND REACH CAPACITY TO LIFT AND SET THE VORTECHS VAULT (LIFTING CLUTCHES PROVIDED).
2. CONTRACTOR TO INSTALL JOINT SEALANT BETWEEN ALL VAULT JOINTS AND ASSEMBLE VAULT.
3. CONTRACTOR TO PROVIDE, INSTALL, AND GROUT PIPES. MATCH PIPE INVERTS WITH ELEVATIONS SHOWN.
4. CONTRACTOR TO PROVIDE ANY EXTERNAL BYPASS VAULTS REQUIRED FOR OFFLINE LAYOUT (UNLESS OTHERWISE SPECIFIED).
5. CONTRACTOR TO PROVIDE AND INSTALL MANHOLE RISERS, GRADE RINGS OR BLOCK REQUIRED BETWEEN THE TOP OF THE VORTECHS SYSTEM AND THE BASE OF THE MANHOLE FRAMES. TOP SLAB OPENING DIAMETER MAY BE DIFFERENT FROM THOSE SHOWN.

STRUCTURE WEIGHT

APPROXIMATE HEAVIEST PICK = 61,500 LBS.

PROJECT NO.	25213134.00	DRAWN BY:	AHB	ENGINEER	SCS ENGINEERS 2830 DAIRY DRIVE MADISON, WI 53718-6751 PHONE: (608) 224-2830	CLIENT	CITY OF MONONA 5211 SCHLUTER ROAD MONONA, WI 53716-2598 608-222-2525	SITE	CITY OF MONONA SCHLUTER BEACH IMPROVEMENT PROJECT	DETAILS SEDIMENT STRUCTURE 1	SHEET 17A
DRAWN:	06/10/14	CHECKED BY:	JO								
REVISED:	01/21/16	APPROVED BY:									

I:\25213134\Drawings-General\Details-Structures.dwg, 1/21/2016 10:52:34 AM

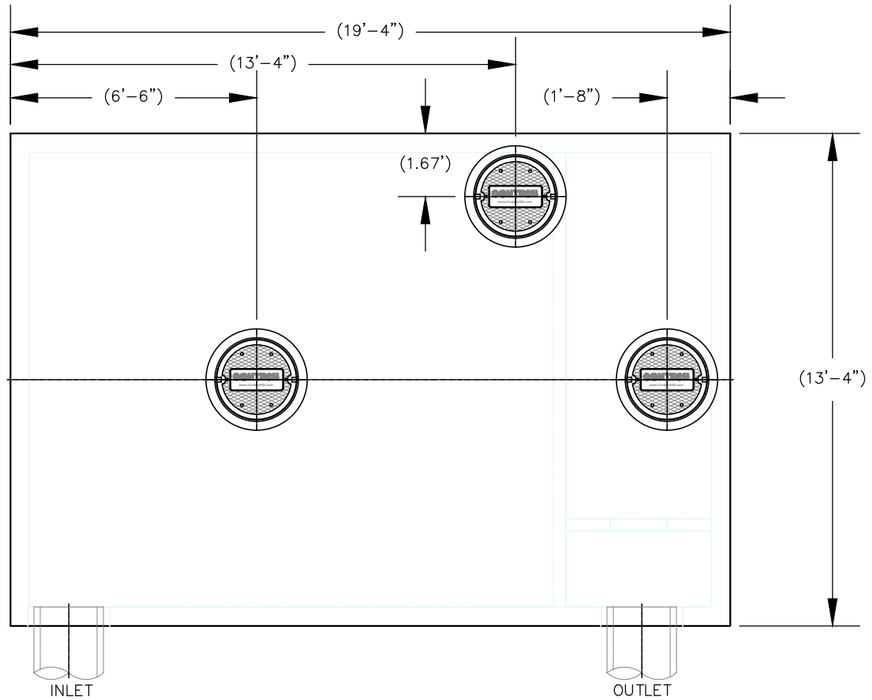

PLAN VIEW

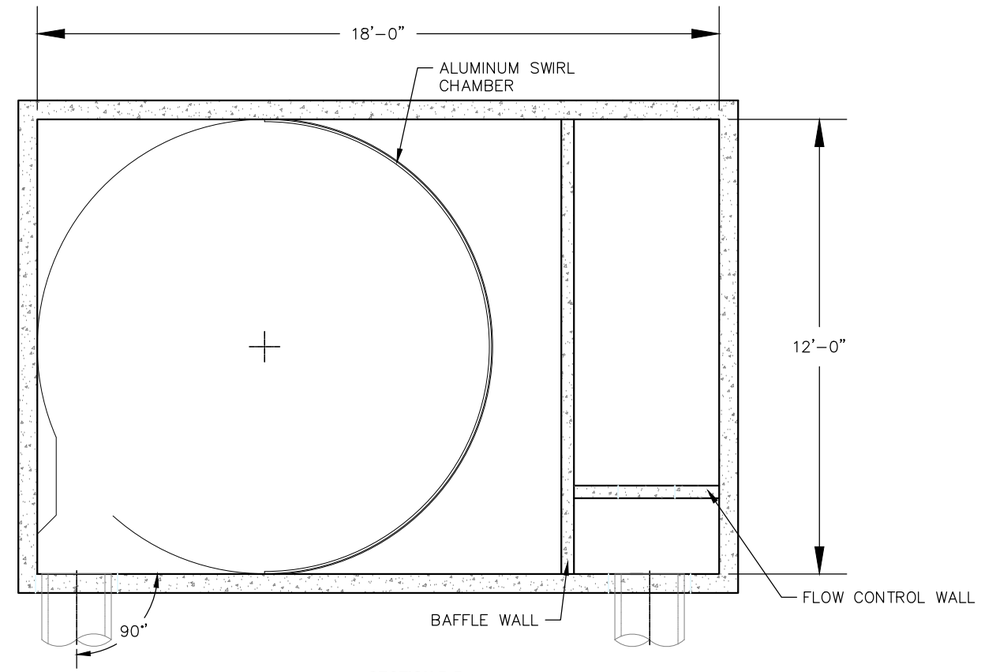

SECTION B-B

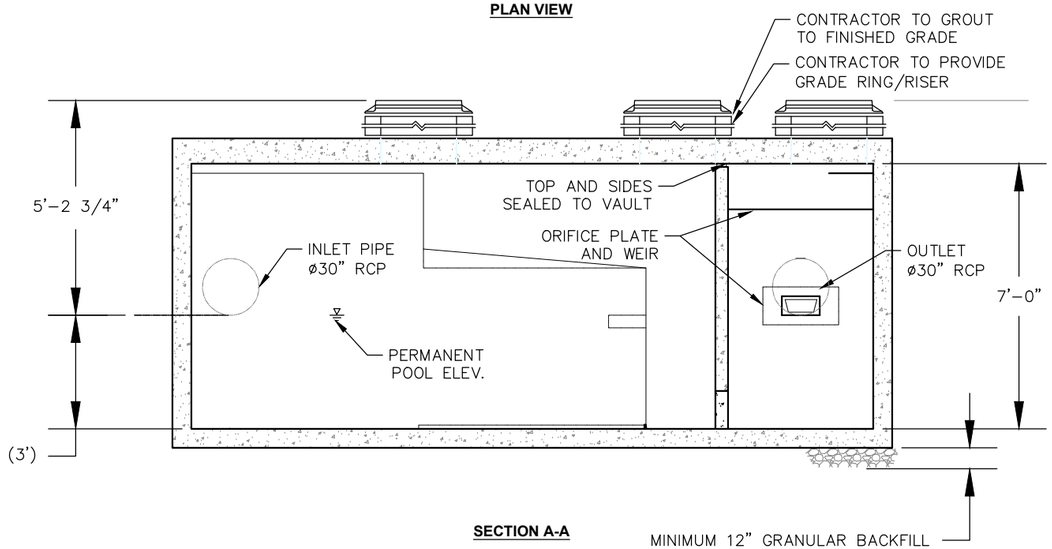

SECTION A-A

MATERIALS LIST – PROVIDED BY CONTECH

COUNT	DESCRIPTION	INSTALLED BY
1	ALUMINUM SWIRL CHAMBER	CONTECH
1	ALUMINUM WEIR PLATE	CONTECH
1	ALUMINUM ORIFICE PLATE	CONTECH
1	SWIRL CHAMBER SEALANT	CONTECH
1	SEALANT FOR JOINTS	CONTRACTOR
3	ø24" x 4" FRAME AND COVER	CONTRACTOR

GENERAL NOTES

1. CONTECH TO PROVIDE ALL MATERIALS UNLESS NOTED OTHERWISE.
2. DIMENSIONS MARKED WITH ( ) ARE REFERENCE DIMENSIONS. ACTUAL DIMENSIONS MAY VARY.
3. FOR FABRICATION DRAWINGS WITH DETAILED VAULT DIMENSIONS AND WEIGHT, PLEASE CONTACT YOUR CONTECH ENGINEERED SOLUTIONS LLC REPRESENTATIVE. www.ContechES.com
4. VORTECHS WATER QUALITY VAULT SHALL BE IN ACCORDANCE WITH ALL DESIGN DATA AND INFORMATION CONTAINED IN THIS DRAWING.
5. STRUCTURE SHALL MEET AASHTO HS20 AND CASTINGS SHALL MEET AASHTO M306 LOAD RATING, ASSUMING EARTH COVER OF 0' – 5', AND GROUNDWATER ELEVATION AT, OR BELOW, THE OUTLET PIPE INVERT ELEVATION. CONFIRM ACTUAL GROUNDWATER ELEVATION.
6. WATER SURFACE ELEVATION IN THE VORTECHS SYSTEM IS EXPECTED TO BE AT OR BELOW TOP OF FLOW CONTROL WALL DURING THE DESIGN STORM.

INSTALLATION NOTES

1. CONTRACTOR TO PROVIDE EQUIPMENT WITH SUFFICIENT LIFTING AND REACH CAPACITY TO LIFT AND SET THE VORTECHS VAULT (LIFTING CLUTCHES PROVIDED).
2. CONTRACTOR TO INSTALL JOINT SEALANT BETWEEN ALL VAULT JOINTS AND ASSEMBLE VAULT.
3. CONTRACTOR TO PROVIDE, INSTALL, AND GROUT PIPES. MATCH PIPE INVERTS WITH ELEVATIONS SHOWN.
4. CONTRACTOR TO PROVIDE ANY EXTERNAL BYPASS VAULTS REQUIRED FOR OFFLINE LAYOUT (UNLESS OTHERWISE SPECIFIED).
5. CONTRACTOR TO PROVIDE AND INSTALL MANHOLE RISERS, GRADE RINGS OR BLOCK REQUIRED BETWEEN THE TOP OF THE VORTECHS SYSTEM AND THE BASE OF THE MANHOLE FRAMES. TOP SLAB OPENING DIAMETER MAY BE DIFFERENT FROM THOSE SHOWN.

STRUCTURE WEIGHT

APPROXIMATE HEAVIEST PICK = 61,500 LBS.

PROJECT NO.	25213134.00	DRAWN BY:	AHB	ENGINEER	SCS ENGINEERS 2830 DAIRY DRIVE MADISON, WI 53718-6751 PHONE: (608) 224-2830	CLIENT	CITY OF MONONA 5211 SCHLUTER ROAD MONONA, WI 53716-2598 608-222-2525	SITE	CITY OF MONONA SCHLUTER BEACH IMPROVEMENT PROJECT	DETAILS SEDIMENT STRUCTURE 2	SHEET 17B
DRAWN:	06/10/14	CHECKED BY:	JO								
REVISED:	01/21/16	APPROVED BY:									

I:\25213134\Drawings-General\Details-Structures.dwg, 1/21/2016 10:54:15 AM

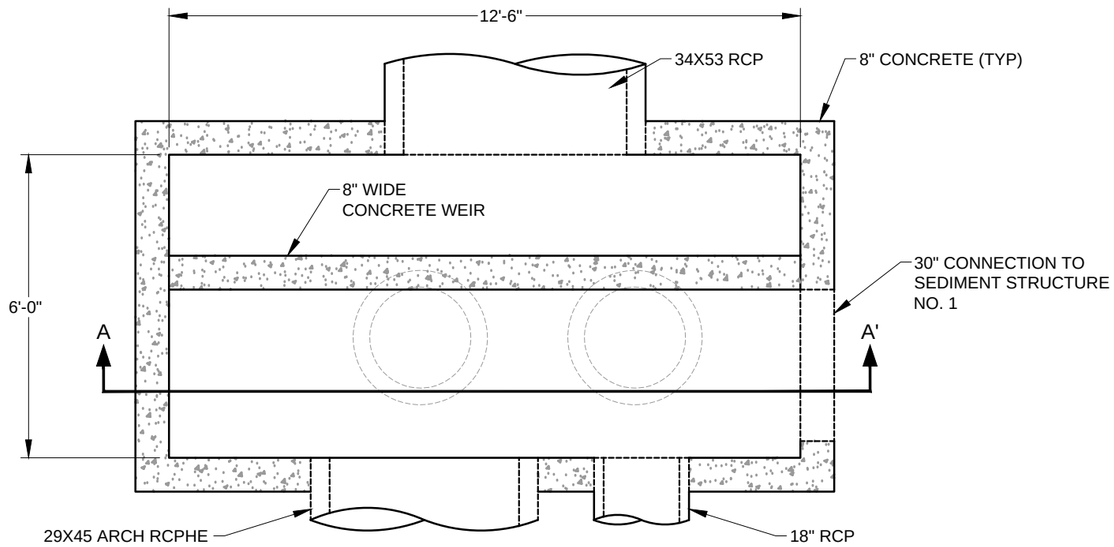

PLAN VIEW

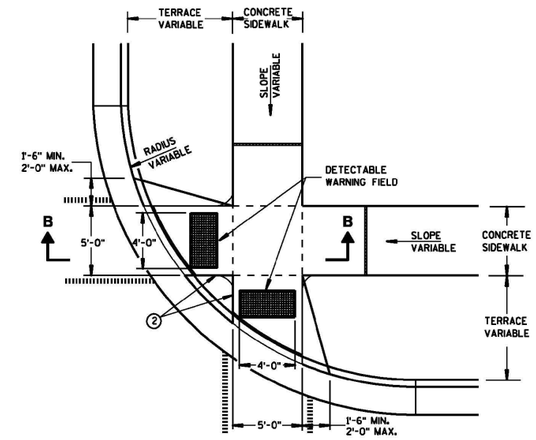

TYPE 2 RAMP

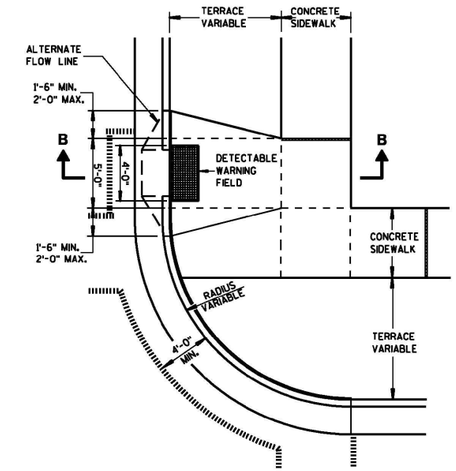

TYPE 3 RAMP

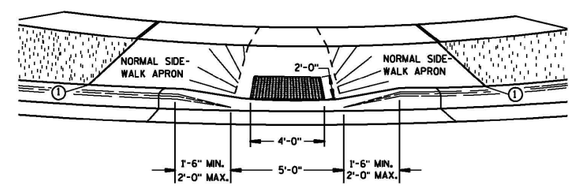

VIEW A-A

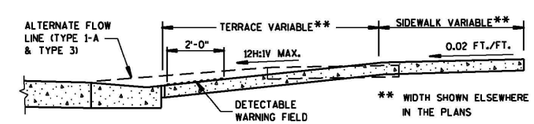

SECTION B-B

TYPE 3 RAMP

GENERAL NOTES

DETAILS OF CONSTRUCTION, MATERIALS AND WORKMANSHIP NOT SHOWN ON THIS DRAWING SHALL CONFORM TO THE PERTINENT REQUIREMENTS OF THE STANDARD SPECIFICATIONS AND THE APPLICABLE SPECIAL PROVISIONS.

RAMPS SHALL BE BUILT AT 12H:1V OR FLATTER. WHEN NECESSARY, THE SIDEWALK ELEVATION MAY BE LOWERED TO MEET THE HIGH POINT ON THE RAMP.

TYPE 1 RAMPS SHALL HAVE A NORMAL SIDEWALK APRON AND CURB ON BOTH SIDES OF RAMP.

DETECTABLE WARNING FIELD SHALL BE MEASURED AND PAID BY THE SQUARE FOOT AS "CURB RAMP DETECTABLE WARNING FIELD". THE CONCRETE PEDESTRIAN CURB, IF NEEDED, SHALL BE MEASURED AND PAID BY THE LINEAL FOOT AS "CONCRETE CURB PEDESTRIAN". ALL OTHER CONCRETE SIDEWALK IN THE CURB RAMP AREA SHALL BE MEASURED AND PAID BY THE SQUARE FOOT AS CONCRETE SIDEWALK.

SELECT CURB RAMP DETECTABLE WARNING FIELD MATERIALS AND DEVICES FROM THE DEPARTMENT'S APPROVED MATERIALS LIST. THE COLOR OF THE DETECTABLE WARNING FIELD IS SPECIFIED ELSEWHERE AND IS INCIDENTAL TO THE BID ITEM OF "CURB RAMP DETECTABLE WARNING FIELD".

SURFACE TEXTURE OF THE RAMP SHALL BE OBTAINED BY COARSE BROOMING TRANSVERSE TO THE SLOPE OF THE RAMP.

USE THE TYPE 3 RAMP ONLY WHEN A TYPE 1 OR TYPE 2 CANNOT BE ACHIEVED BECAUSE OF FIELD CONDITIONS.

(1) THIS POINT IS AN EXTENSION OF OUTSIDE EDGE OF APPROACHING SIDEWALK WHERE IT MEETS THE BACK OF CONCRETE CURB.

(2) WHEN THIS DISTANCE IS LESS THAN 6'-0" IT MAY BE DIFFICULT TO ACHIEVE A 12H:1V SLOPE, OR FLATTER, ON THE RAMP. REDUCE CURB HEIGHT IN TRIANGLE AREA TO ACHIEVE 12H:1V SLOPE, OR FLATTER, ON RAMP. 2" MINIMUM CURB HEIGHT.

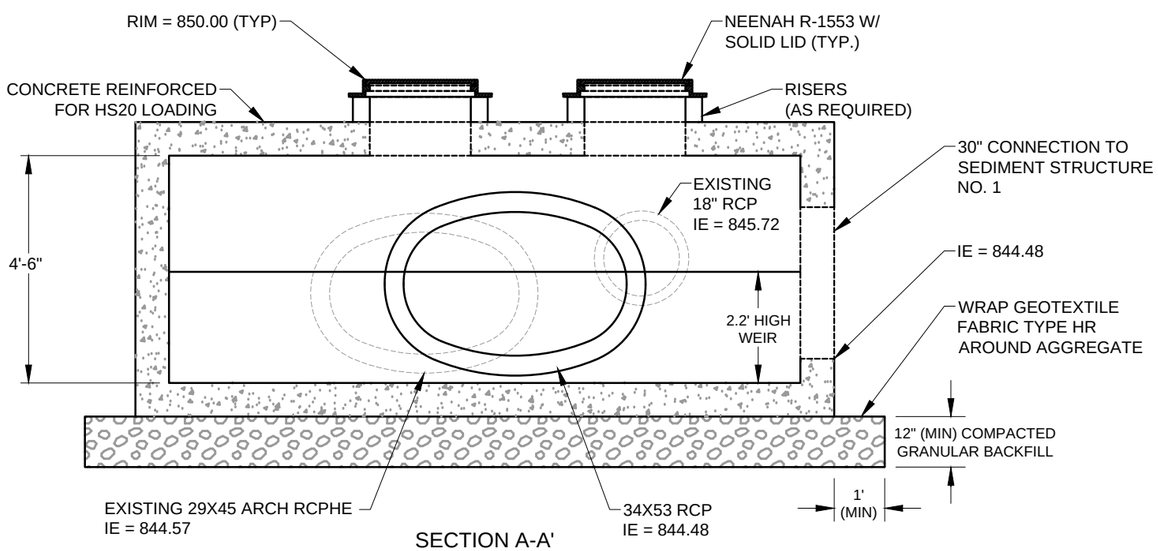

SECTION A-A'

NOTES:

1. STRUCTURE BY CONTECH OR APPROVED EQUIVALENT.
2. PIPE ORIENTATION MAY VARY; SEE SITE PLAN FOR SIZE AND LOCATION
3. MANHOLE FRAMES AND PERFORATED COVERS SUPPLIED WITH SYSTEM, NOT INSTALLED.
4. GROUT CONNECTION BETWEEN STMH4 STRUCTURE AND SEDIMENT STRUCTURE NO. 1

PROJECT NO.	25213134	DRAWN BY:	KP	ENGINEER	SCS ENGINEERS 2830 DAIRY DRIVE MADISON, WI 53718-6751 PHONE: (608) 224-2830	CLIENT	CITY OF MONONA 5211 SCHLUTER ROAD MONONA, WI 53716-2598 608-222-2525	SITE	CITY OF MONONA SCHLUTER BEACH IMPROVEMENT PROJECT	DETAILS STMH4 STRUCTURE & SIDEWALK RAMP	SHEET 18
DRAWN:	06/10/14	CHECKED BY:	BP								
REVISED:	01/25/16	APPROVED BY:									

I:\25213134\Drawings-General\Details-STMH4.dwg, 1/25/2016 1:58:42 PM

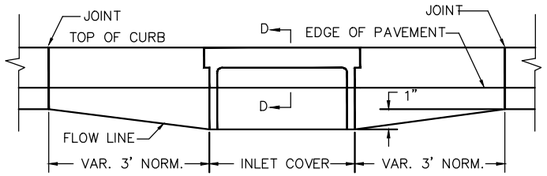

ELEVATION

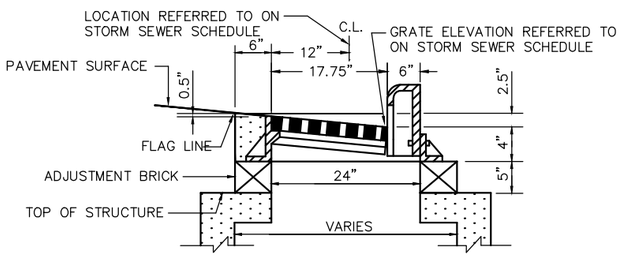

SECTION D–D

CURB AND GUTTER AT INLET

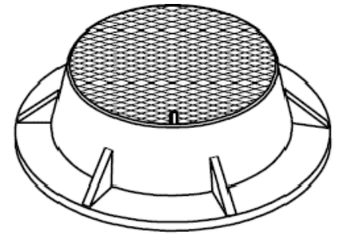

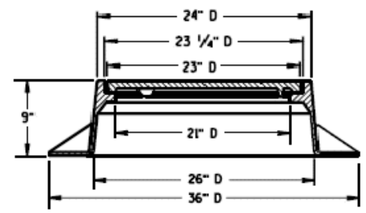

(APPROXIMATE WEIGHT 250 LBS.)
FRAME.....135 LBS.
LID.....115 LBS.

NEENAH R-1550 TYPE B (WIS DOT TYPE J)

MANHOLE RIM AND COVER

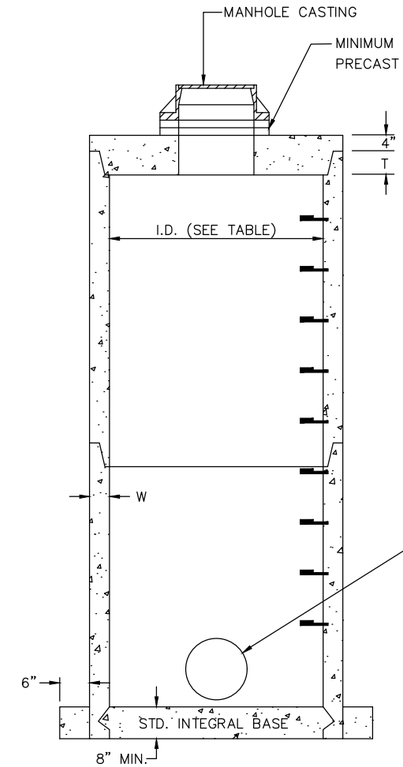

I.D.	T	W
96"	5"	9"
48"	5"	5"

STEPS SHALL BE EQUALLY SPACED VERTICALLY IN THE ASSEMBLED MANHOLE AT A MAXIMIUM DISTANCE OF 16" ON CENTER.

STEPS SHALL BE GRAY CAST IRON OR FABRICATED OF 1/2" DIA. GRADE 60 STEEL REINFORCING ROD WITH MOLDED PLASTIC COVERING.

CONCRETE AND STEEL REINFORCEMENT SHALL CONFROM TO ASTM C478.

JOINTS SHALL BE WATERTIGHT: RUBBER GASKETS OR FLEXIBLE BUTYL RUBBER GASKETS/ROPE.

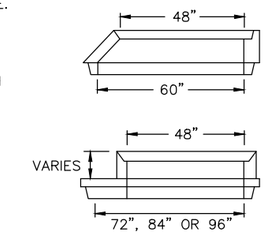

TRANSITION SECTIONS

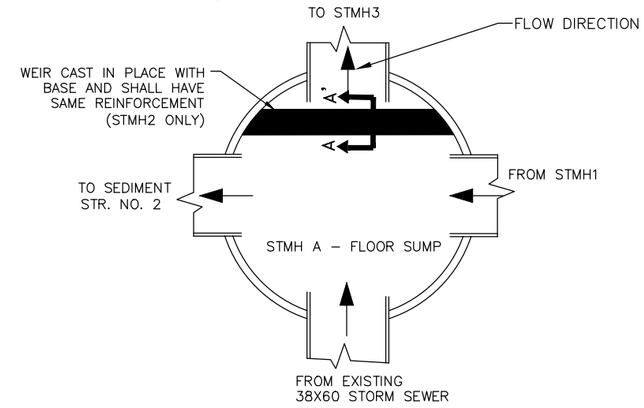

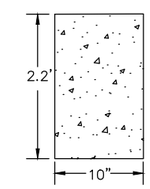

SECTION A-A'

LARGE DIAMETER STORM SEWER MANHOLE

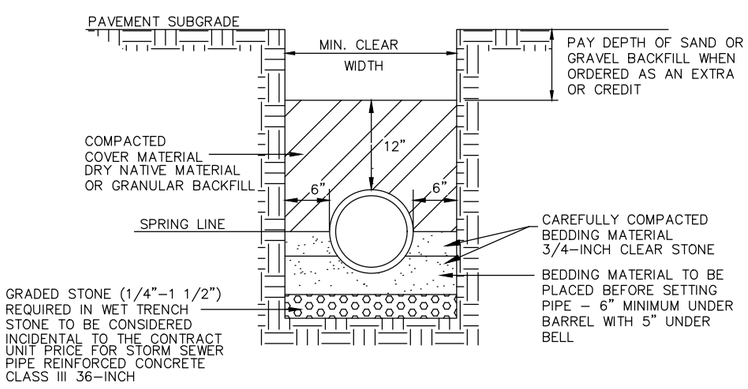

STORM SEWER PIPE BEDDING

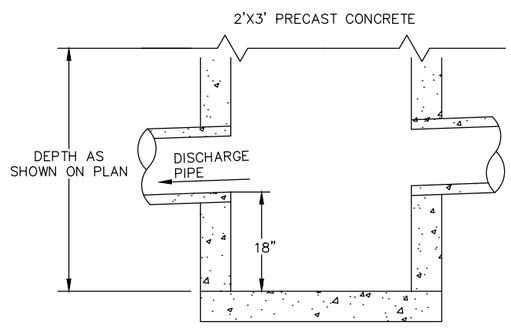

NOTE: DETAILS NOT SHOWN SHALL CONFORM TO STANDARD DETAIL DRAWING FOR INLETS TYPE 3.

INLET TYPE 3 MODIFIED

PROJECT NO.	25213134.00	DRAWN BY:	KP
DRAWN:	07/23/14	CHECKED BY:	BP
REVISED:	01/21/15	APPROVED BY:	

ENGINEER: SCS ENGINEERS, 2830 DAIRY DRIVE MADISON, WI 53718–6751, PHONE: (608) 224–2830

CLIENT: CITY OF MONONA, 5211 SCHLUTER ROAD, MONONA, WI 53716–2598, 608–222–2525

SITE: CITY OF MONONA, SCHLUTER BEACH IMPROVEMENT PROJECT

DETAILS, STORM SEWER

SHEET 19

I:\25213134\Drawings-General\Details-Storm.dwg, 11/24/2015 4:24:33 PM

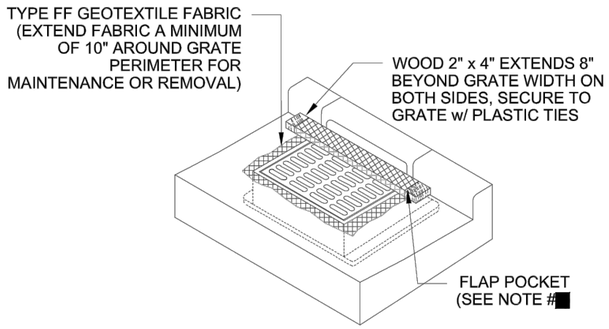

INLET PROTECTION
TYPE C
WITH CURB BOX

NOTES:

1. WHEN REMOVING OR MAINTAINING INLET PROTECTION, CARE SHALL BE TAKEN SO THAT THE SEDIMENT TRAPPED IN THE FABRIC DOES NOT FALL INTO THE STRUCTURE. MATERIAL THAT HAS FALLEN INTO THE INLET SHALL BE IMMEDIATELY REMOVED.

[redacted]

INLET PROTECTION

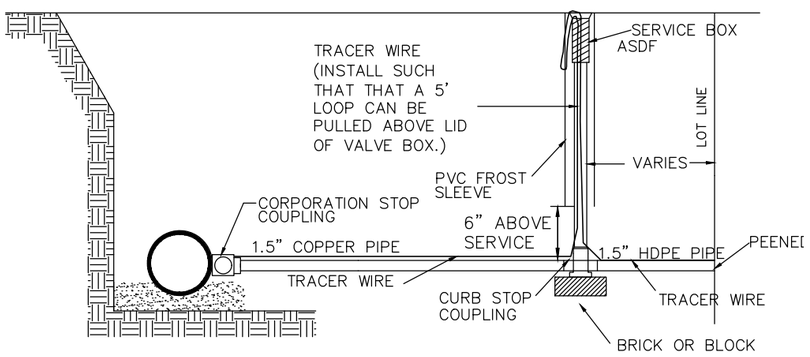

NO JOINTS ALLOWED BETWEEN CORP & CURB STOP WITHOUT ENGINEER'S PERMISSION

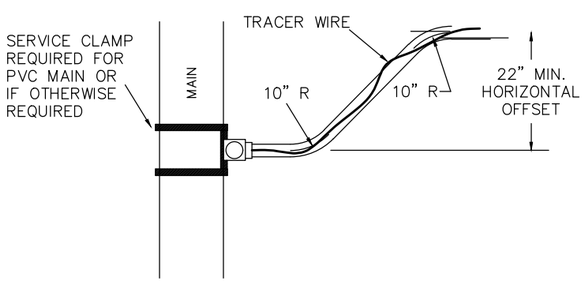

WATER SERVICE DETAIL

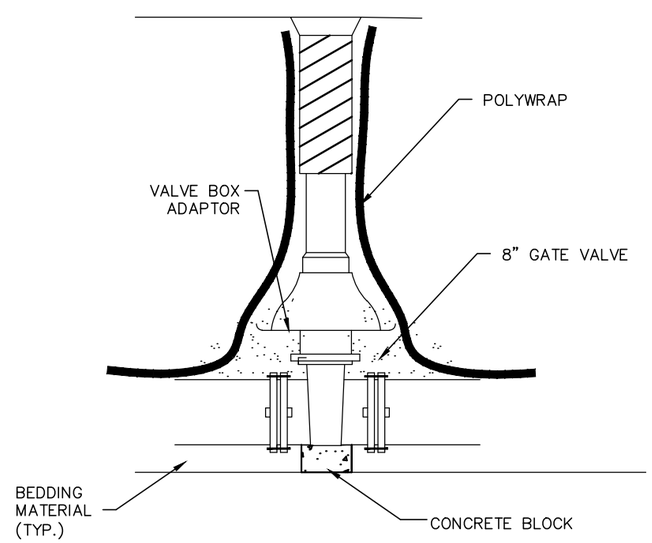

STANDARD VALVE SETTING

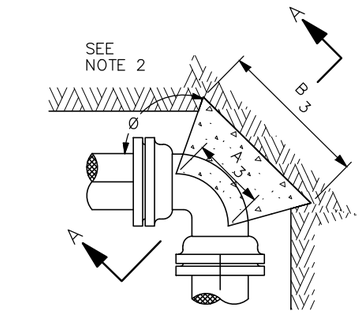

PLAN – 90° BEND

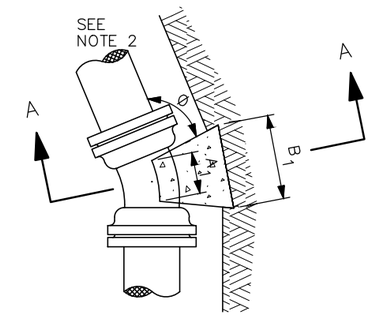

PLAN – 22 1/2 ° BEND

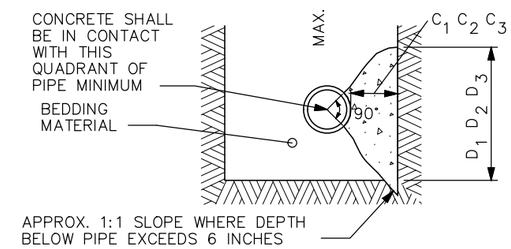

SECTION A–A

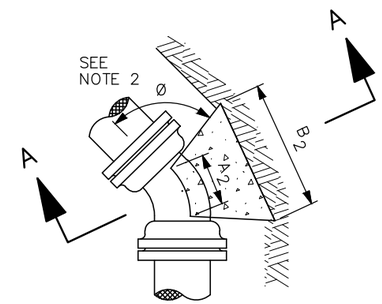

PLAN – 45° BEND

NOTES:

1. DIMENSIONS IN TABLE ARE BASED ON A WATER PRESSURE OF 150 P.S.I. AND AN EARTH RESISTANCE OF 2 TONS PER SQ. FT. INFORM THE ENGINEER IF PRESSURES EXCEED 150 PSI, OR ON–SITE SOIL DOES NOT MEET THIS CONDITION.
2. DIMENSION C_1 C_2 C_3 SHOULD BE LARGE ENOUGH TO MAKE ANGLE Ø EQUAL TO OR LARGER THAN 45°.
3. DIMENSION A_1 A_2 A_3 SHOULD BE AS LARGE AS POSSIBLE WITHOUT INTERFERRING WITH THE MECHANICAL JOINT.
4. BUTTRESS TO BE POURED AGAINST FIRM UNDISTURBED SOIL, OR DISTURBED SOIL COMPACTED TO 95% OF MODIFIED PROCTOR DENSITY, ASTM D1557.

BUTTRESS DIMENSIONS						
PIPE SIZE	22 1/2 ° BENDS		45° BENDS		90° BENDS	
	B_1	D_1	B_2	D_2	B_3	D_3
6"	1'–0"	1'–0"	1'–0"	1'–0"	1'–4"	1'–2"
8"	1'–0"	1'–0"	1'–4"	1'–2"	1'–10"	1'–6"
10"	1'–2"	1'–2"	1'–7"	1'–7"	2'–3"	1'–10"
12"	1'–4"	1'–4"	1'–10"	1'–10"	2'–8"	2'–3"
16"	1'–10"	1'–8"	2'–6"	2'–4"	3'–10"	2'–10"

WATERMAIN BUTTRESS DETAILS

PROJECT NO.	25213134.00	DRAWN BY:	BS
DRAWN:	11/11/10	CHECKED BY:	BP
REVISED:	01/21/15	APPROVED BY:	

ENGINEER: SCS ENGINEERS, 2830 DAIRY DRIVE MADISON, WI 53718–6751, PHONE: (608) 224–2830

CLIENT: CITY OF MONONA, 5211 SCHLUTER ROAD, MONONA, WI 53716–2598, 608–222–2525

SITE: CITY OF MONONA, SCHLUTER BEACH IMPROVEMENT PROJECT

DETAILS
INLET PROTECTION AND WATERMAIN

SHEET 20

I:\25213134\Drawings-General\Details-Sanitary.dwg, 11/24/2015 4:25:31 PM

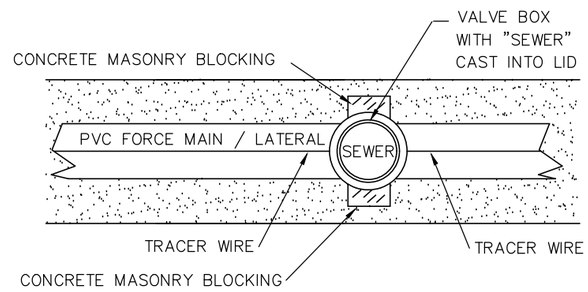

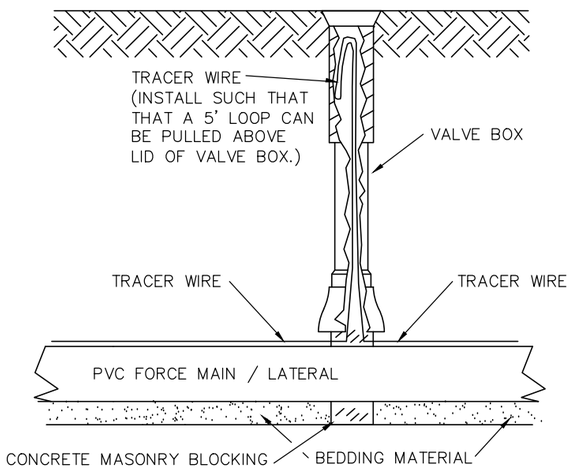

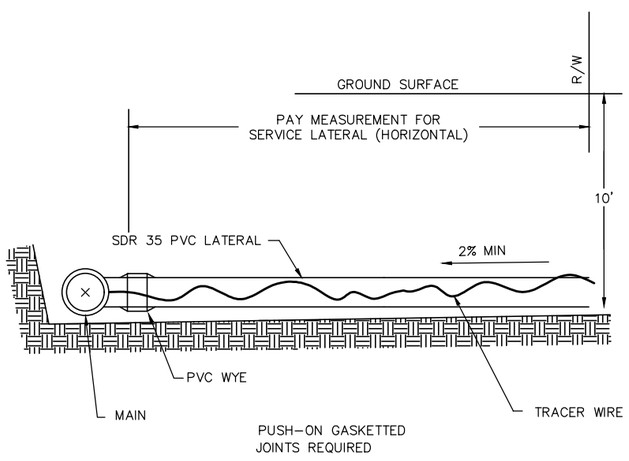

TRACER WIRE ACCESS DETAIL

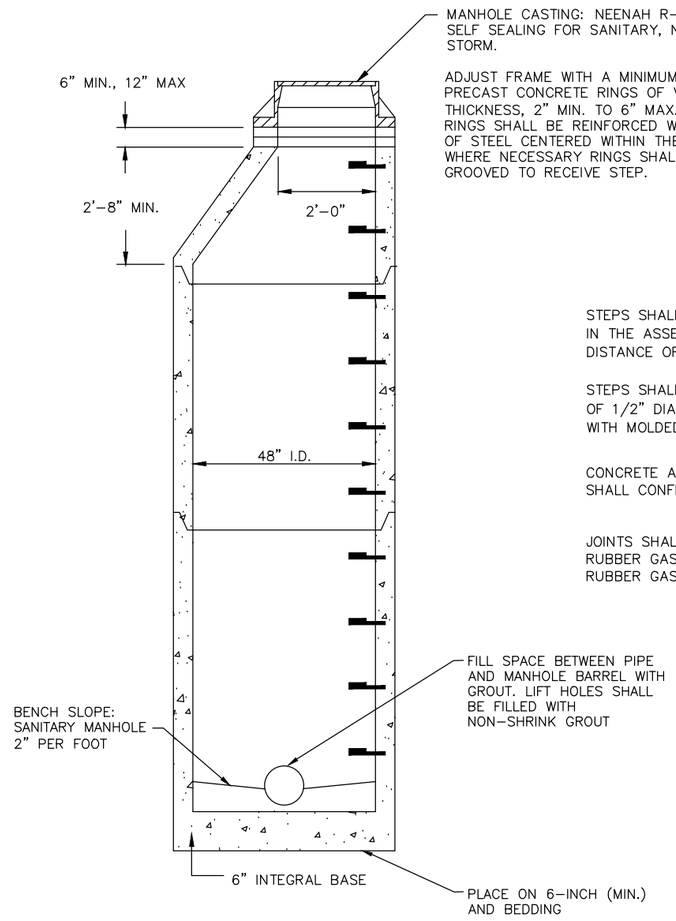

STEPS SHALL BE EQUALLY SPACED VERTICALLY IN THE ASSEMBLED MANHOLE AT A MAXIMIUM DISTANCE OF 16" ON CENTER.

STEPS SHALL BE GRAY CAST IRON OR FABRICATED OF 1/2" DIA. GRADE 60 STEEL REINFORCING ROD WITH MOLDED PLASTIC COVERING.

CONCRETE AND STEEL REINFORCEMENT SHALL CONFROM TO ASTM C478.

JOINTS SHALL BE WATERTIGHT: RUBBER GASKETS OR FLEXIBLE BUTYL RUBBER GASKETS/ROPE.

SANITARY MANHOLE (TYP.)

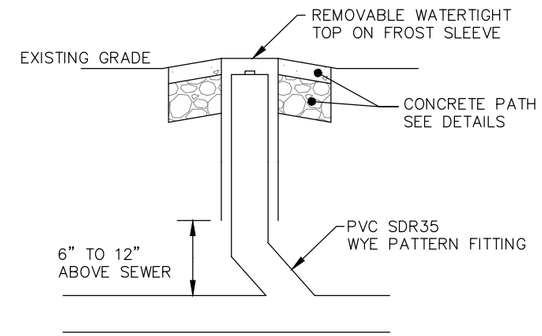

SANITARY CLEANOUT

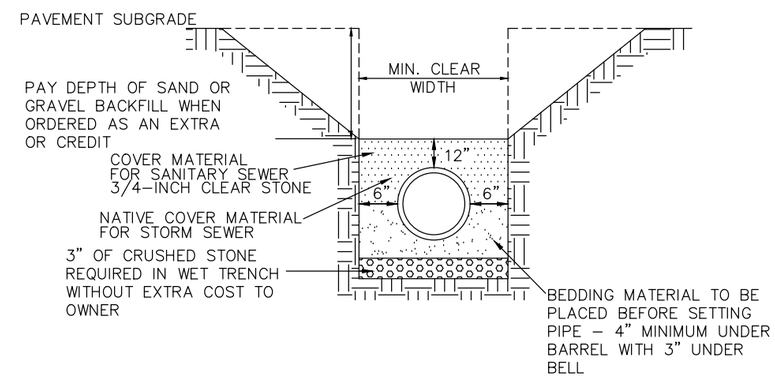

SANITARY SERVICE LATERAL PIPE BEDDING

PROJECT NO.	25213134.00	DRAWN BY:	BS
DRAWN:	11/11/10	CHECKED BY:	BP
REVISED:	01/21/15	APPROVED BY:	

ENGINEER: SCS ENGINEERS, 2830 DAIRY DRIVE MADISON, WI 53718-6751, PHONE: (608) 224-2830

CLIENT: CITY OF MONONA, 5211 SCHLUTER ROAD, MONONA, WI 53716-2598, 608-222-2525

SITE: CITY OF MONONA SCHLUTER BEACH IMPROVEMENT PROJECT

DETAILS SANITARY SEWER

SHEET 21

I:\25213134\Drawings-General\Details-Wire.dwg, 11/24/2015 4:26:25 PM