COLD SPRING DESIGN, LLC

222 SOUTH MAIN STREET - FORT ATKINSON, WI 53538
(920)568-9530 - WWW.COLDSPRINGDESIGN.NET

FOUR LAKES YACHT CLUB DECK RENOVATION

DRAWING INDEX:

ARCHITECTURAL
- A0.1 DEMOLITION PLAN
- A1.0 GROUND LEVEL PLAN
- A1.1 MID LEVEL DECK PLAN
- A2.0 EAST ELEVATION OPTIONS

STRUCTURAL
- S0.0 NOTES & SCHEDULES
- S1.1 FOUNDATION PLAN
- S1.2 FIRST FLOOR FRAMING PLAN
- S2.0 STRUCTURAL DETAILS
- S2.1 STRUCTURAL DETAILS

SEAL

OWNER:

PROJECT OWNER
FOUR LAKES YACHT CLUB
6312 METROPOLITAN LANE
MONONA, WI 53713

ARCHITECT / ENGINEER:

COLD SPRING DESIGN, LLC
222 SOUTH MAIN STREET
FORT ATKINSON, WI 53538
PHONE: (920)568-9530
CONTACT: CONOR NELAN

Cold Spring Design

222 South Main Street
Fort Atkinson, WI 53538
P (920)568-9530
F (920)568-9531

ISSUE

#	DATE	DESCRIPTION

FOUR LAKES YACHT CLUB
6312 METROPOLITAN LANE - MONONA, WI 53713

CSD PROJECT #: 13054A

SCALE:	AS NOTED
DATE:	12/23/2013
DRAWN BY:	CFN
CHECKED BY:	CFN

TITLE SHEET

TS0.0

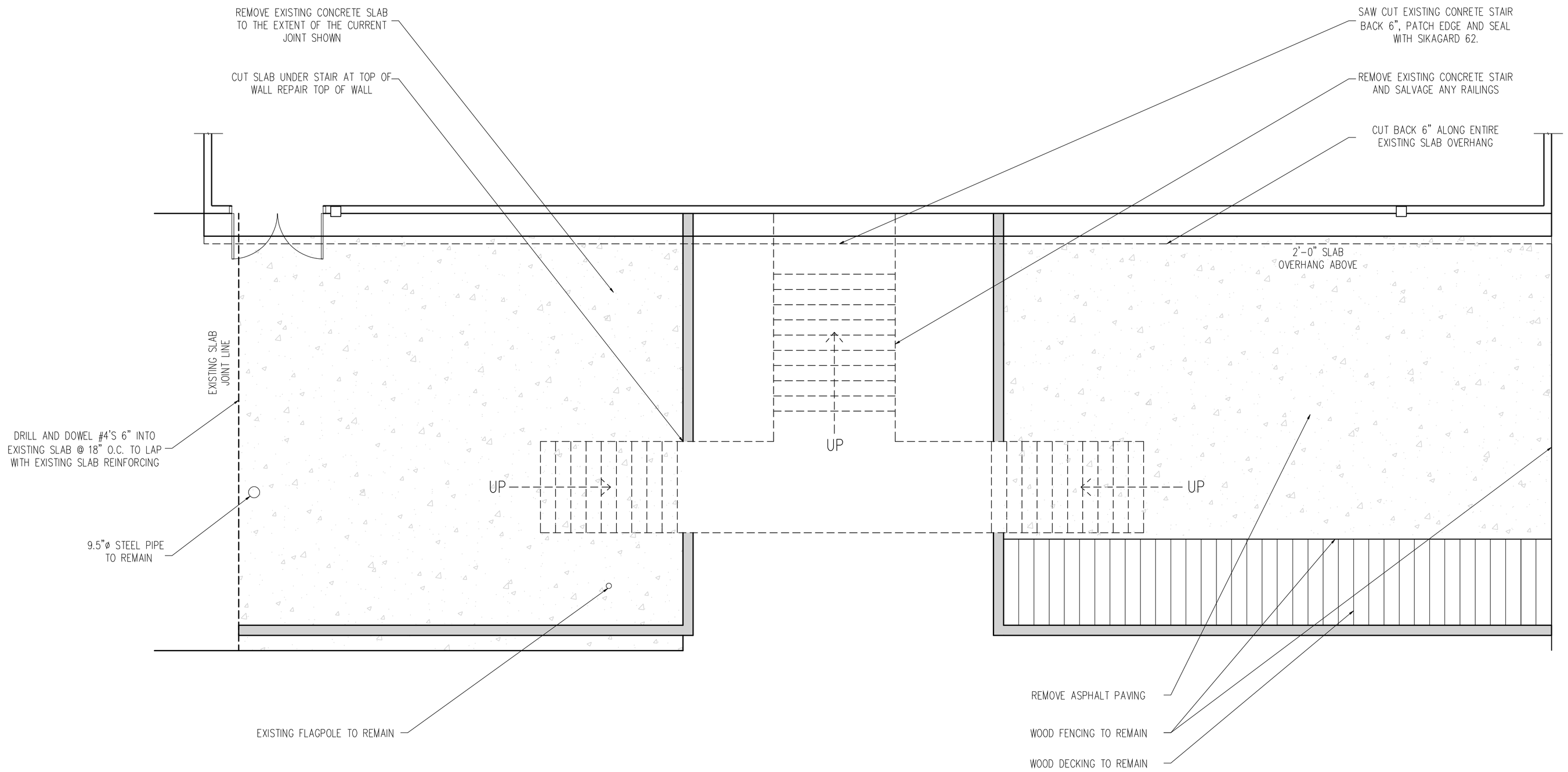

1
S1.0

DEMOLITION PLAN

SCALE: 1/4" = 1'-0"

N

Cold Spring Design

222 South Main Street
Fort Atkinson, WI 53538
P (920)568-9530
F (920)568-9531

ISSUE

#	DATE	DESCRIPTION

FOUR LAKES YACHT CLUB

6312 METROPOLITAN LANE - MONONA, WI 53713

CSD PROJECT #: 13034A

SCALE:	AS NOTED
DATE:	12/23/2013
DRAWN BY:	CFN
CHECKED BY:	CFN

DEMOLITION PLAN

A0.1

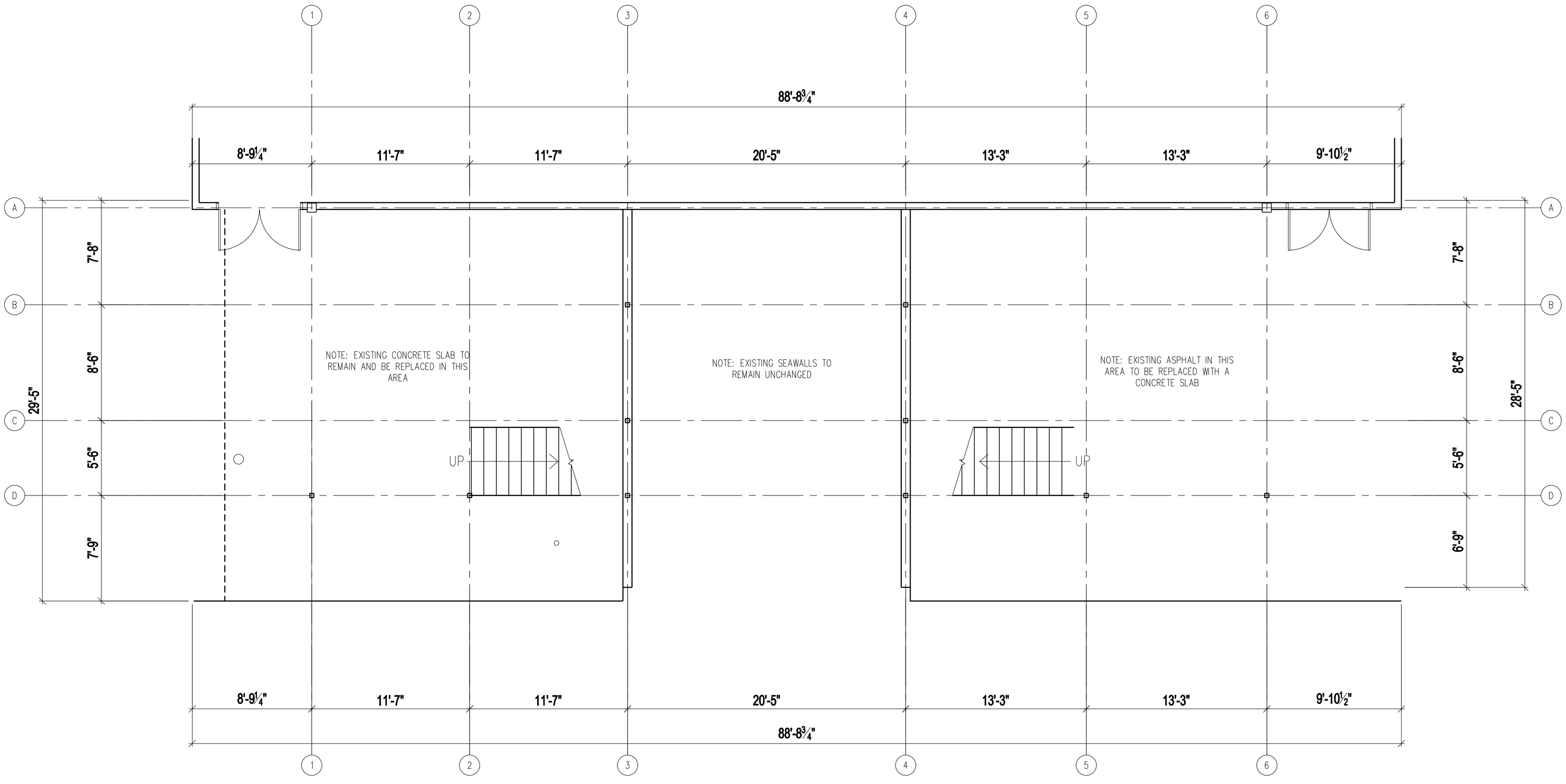

1
A1.0

1ST FLOOR PLAN

SCALE: 1/4" = 1'-0"

N

Cold Spring Design

222 South Main Street
Fort Atkinson, WI 53538
P (920)568-9530
F (920)568-9531

ISSUE

#	DATE	DESCRIPTION

FOUR LAKES YACHT CLUB

6312 METROPOLITAN LANE - MONONA, WI 53713

CSD PROJECT #: 13034A

SCALE:	AS NOTED
DATE:	12/23/2013
DRAWN BY:	CFN
CHECKED BY:	CFN

GROUND LEVEL PLAN

A1.0

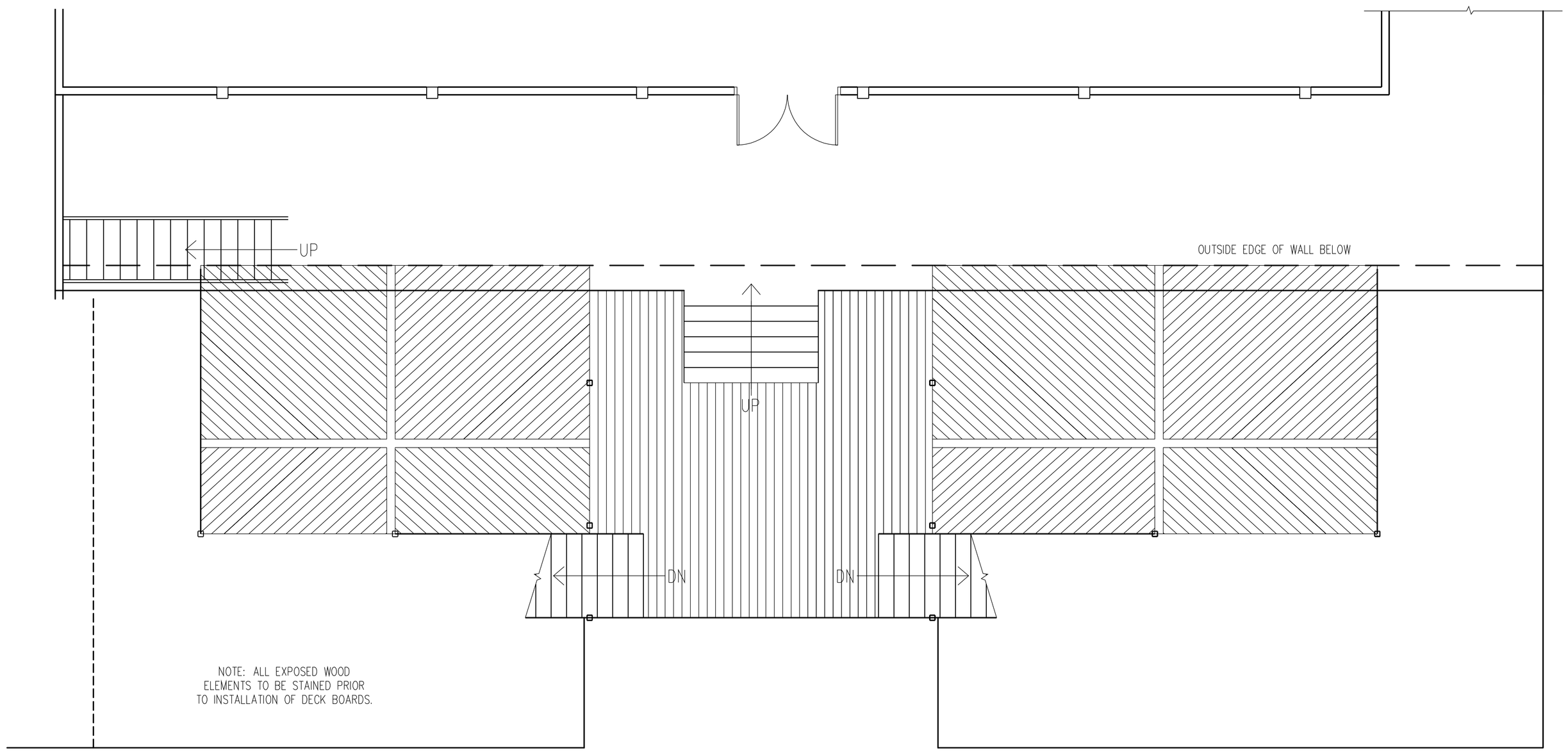

1
A1.1

2ND FLOOR PLAN

SCALE: 1/4" = 1'-0"

N

NOTE: ALL EX
ELEMENTS TO BE
TO INSTALLATION (

Cold Spring Design

222 South Main Street
Fort Atkinson, WI 53538
P (920)568-9530
F (920)568-9531

ISSUE

#	DATE	DESCRIPTION

FOUR LAKES YACHT CLUB

6312 METROPOLITAN LANE - MONONA, WI 53713

CSD PROJECT #: 130364A

SCALE:	AS NOTED
DATE:	12/23/2013
DRAWN BY:	CFN
CHECKED BY:	CFN

MID LEVEL
DECK PLAN

A1.1

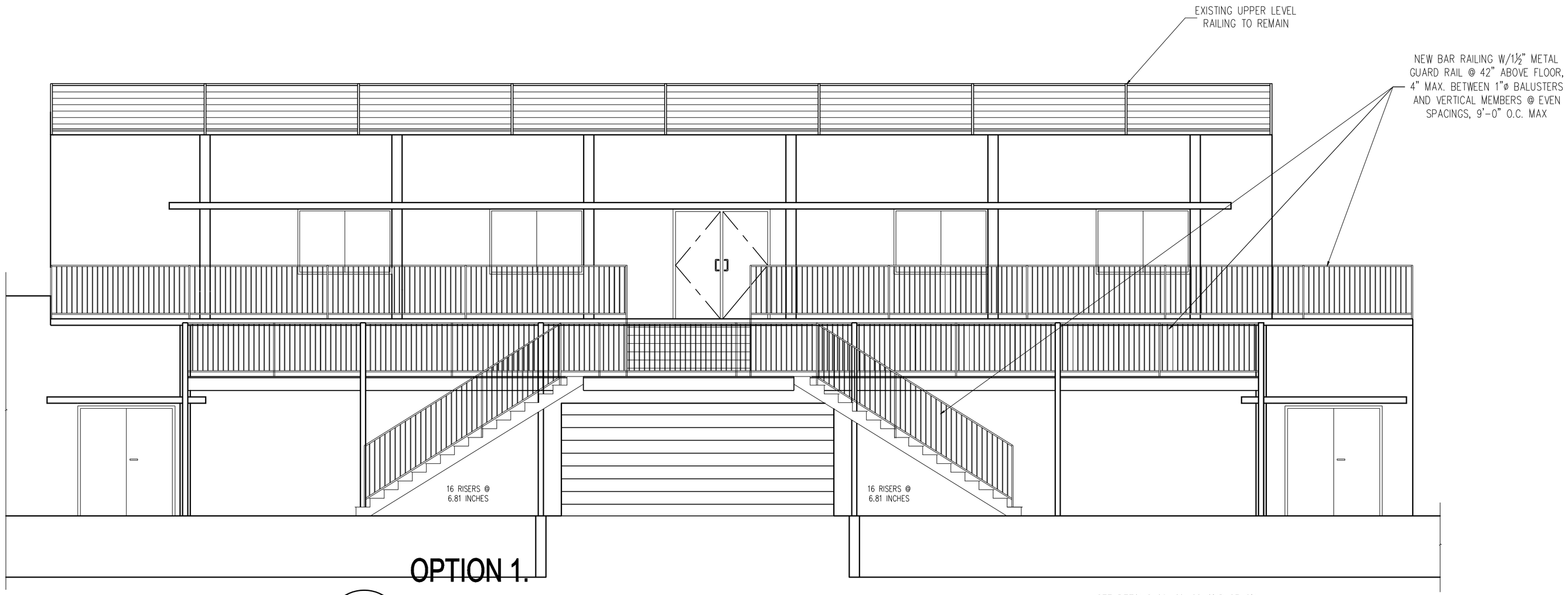

OPTION 1.
EAST ELEVATION W/ ALL NEW RAILINGS

2 / A2.0

SCALE: 1/4" = 1'-0"

N

SEE DETAILS 10 ,11, 12 AND 13 ON SHEET S2.0 FOR RAILING OPTION 3. ELEVATION TO FOLLOW BY ADDENDUM

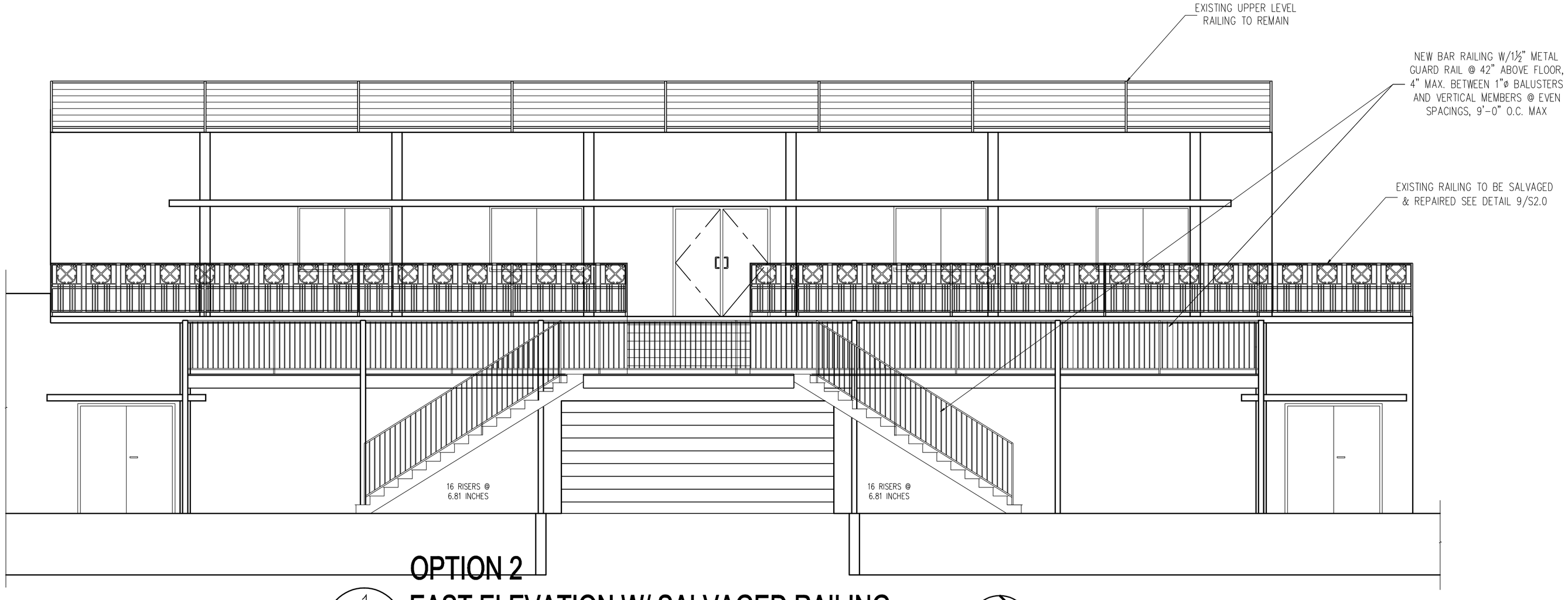

OPTION 2
EAST ELEVATION W/ SALVAGED RAILING

1 / A2.0

SCALE: 1/4" = 1'-0"

N

SEE DETAILS 10 ,11, 12 AND 13 ON SHEET S2.0 FOR RAILING OPTION 3. ELEVATION TO FOLLOW BY ADDENDUM

Cold Spring Design

222 South Main Street
Fort Atkinson, WI 53538
P (920)568-9530
F (920)568-9531

ISSUE

#	DATE	DESCRIPTION

FOUR LAKES YACHT CLUB
6312 METROPOLITAN LANE - MONONA, WI 53713

CSD PROJECT #: 13054A

SCALE:	AS NOTED
DATE:	12/23/2013
DRAWN BY:	CFN
CHECKED BY:	CFN

EAST ELEVATION OPTIONS

A2.0

FOUNDATION LEGEND

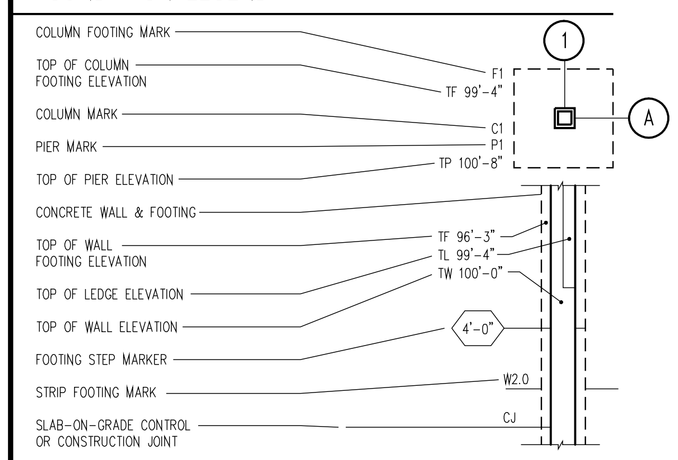

FOOTING SCHEDULE

MARK	DIMENSIONS			REINFORCEMENT	REMARKS
	WIDTH	LENGTH	DEPTH		
F3.5	3'-6"	3'-6"	1'-0"	5- #4 EW	

FOOTING SCHEDULE NOTES
1. LW = LONG WAY
   SW = SHORT WAY
   EW = EACH WAY
   T = TOP
   B = BOTTOM
   CONT = CONTINUOUS

COLUMN & BASE PLATE SCHEDULE

MARK	SIZE	BASE PLATE & ANCHOR BOLT INFORMATION	REMARKS
C1	GALVANISED HSS 4x4x3/16	PL ¾"x10"x10"-10" w/ 4-¾"ø AB'S	SEE DETAIL 5&6/S2.0

COLUMN & BASE PLATE SCHEDULE NOTES
1. SEE DESIGN PROPERTIES SECTION FOR BASE PLATE AND ANCHOR BOLT INFORMATION.
2. SEE DETAIL 7/S2.0 FOR TYPICAL ANCHOR BOLT INFORMATION.

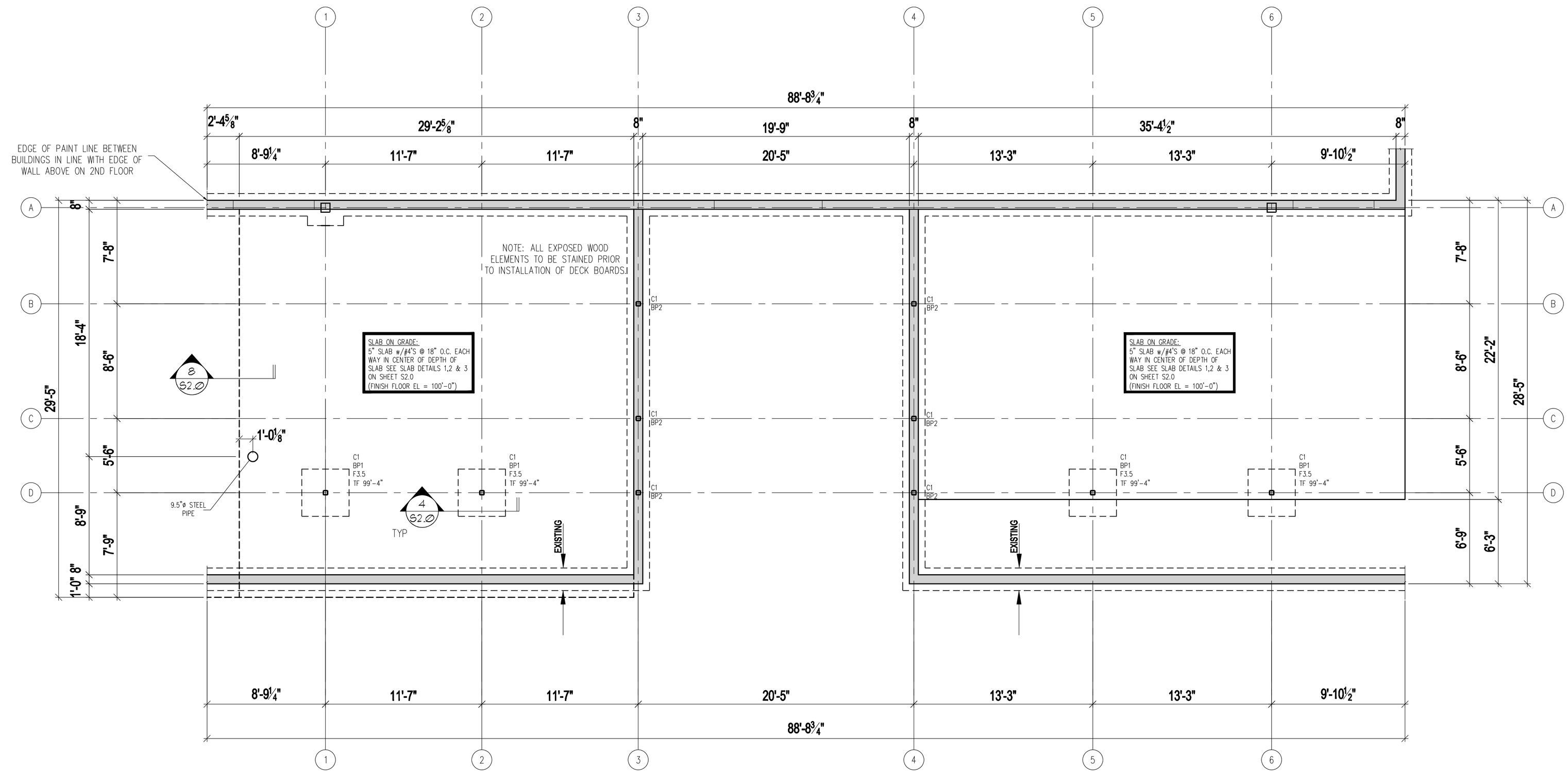

1 / S1.1 **FOUNDATION PLAN**

SCALE: 1/4" = 1'-0"

N

Cold Spring Design

222 South Main Street
Fort Atkinson, WI 53538
P (920)568-9530
F (920)568-9531

ISSUE

#	DATE	DESCRIPTION

FOUR LAKES YACHT CLUB
6312 METROPOLITAN LANE - MONONA, WI 53713

CSD PROJECT #: 13054A

SCALE: AS NOTED
DATE: 12/23/2013
DRAWN BY: CFN
CHECKED BY: CFN

FOUNDATION PLAN

S1.1

STEEL FRAMING LEGEND

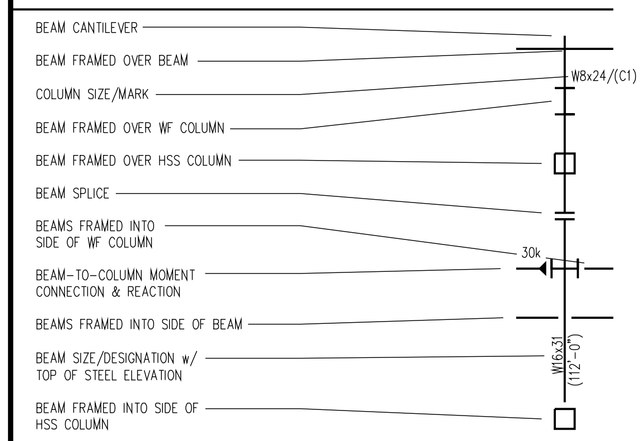

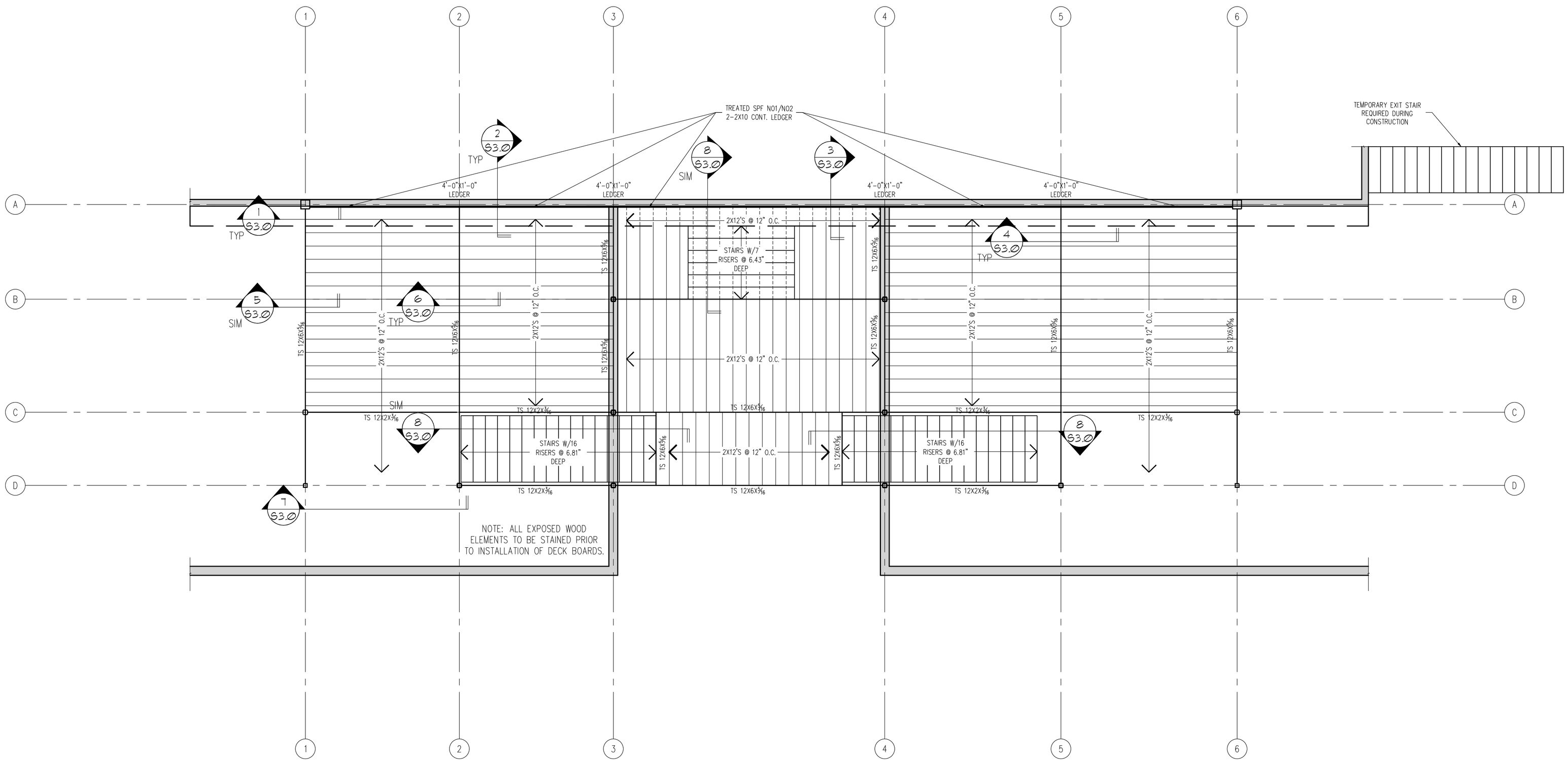

1 / S1.2 **1ST FLOOR FRAMING PLAN**

SCALE: 1/4" = 1'-0"

N

Cold Spring Design

222 South Main Street
Fort Atkinson, WI 53538
P (920)568-9530
F (920)568-9531

ISSUE

#	DATE	DESCRIPTION

FOUR LAKES YACHT CLUB

6312 METROPOLITAN LANE - MONONA, WI 53713

CSD PROJECT #: 13054A

SCALE:	AS NOTED
DATE:	12/23/2015
DRAWN BY:	CFN
CHECKED BY:	CFN

1ST FLOOR FRAMING PLAN

S1.2

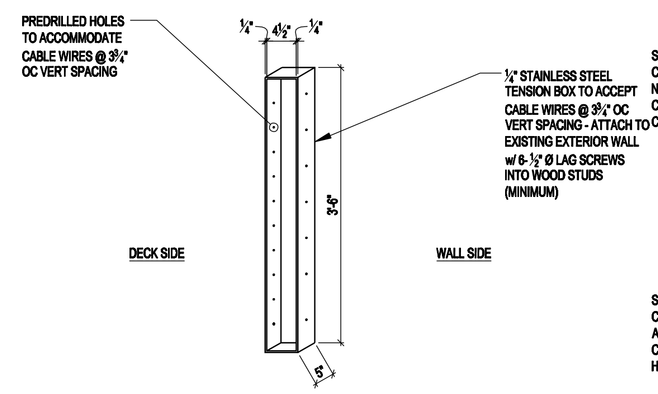

13 S2.0 DECK FRAMING DETAIL
SCALE: NTS

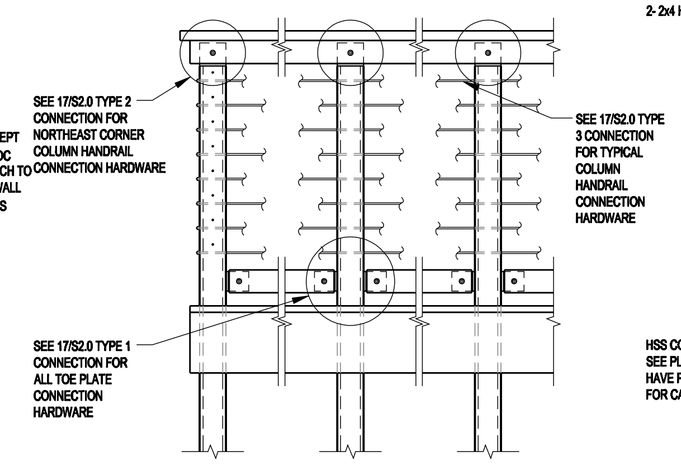

12 S2.0 RAIL CONNECTION DETAIL
SCALE: NTS

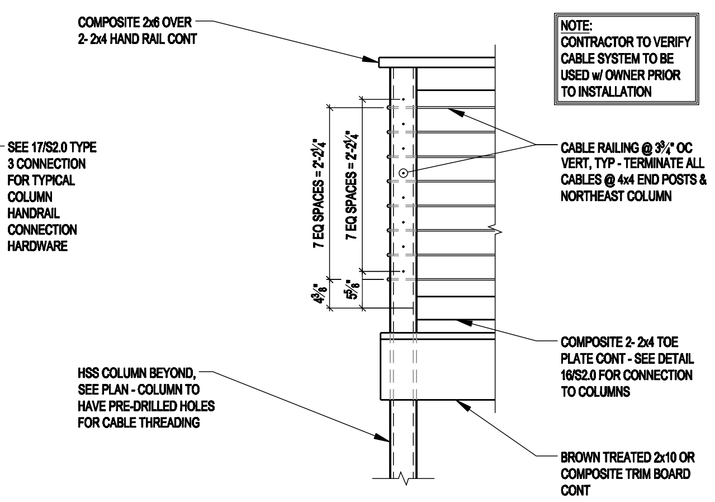

11 S2.0 RAILING CROSS-SECTION
SCALE: NTS

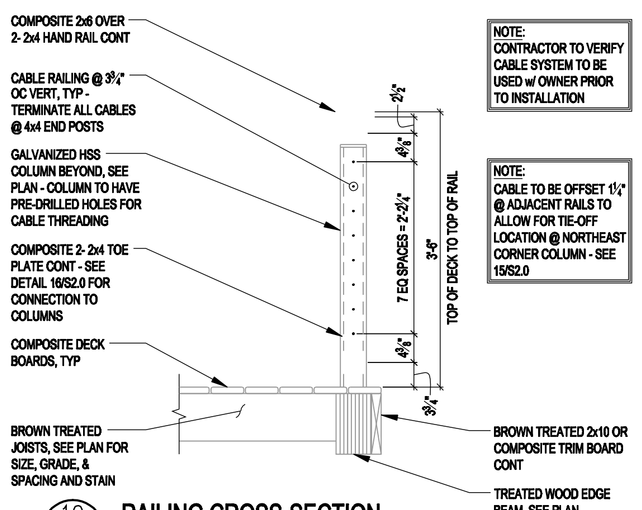

10 S2.0 RAILING CROSS-SECTION
SCALE: NTS

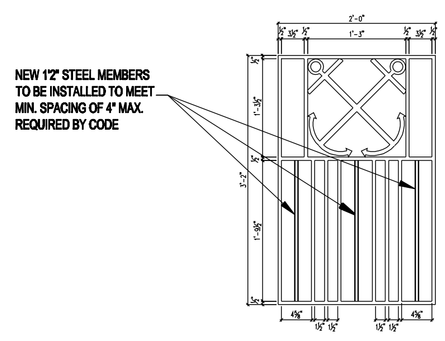

9 S2.0 SALVAGED RAIL DETAIL
SCALE: NTS

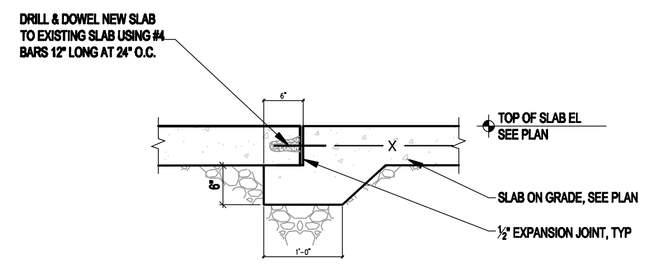

8 S2.0 NEW SLAB CONNECTION TO EXISTING
SCALE: NTS

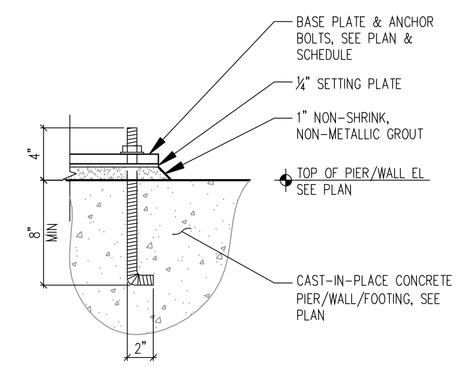

7 S2.0 TYPICAL ANCHOR BOLT DETAIL
SCALE: NTS

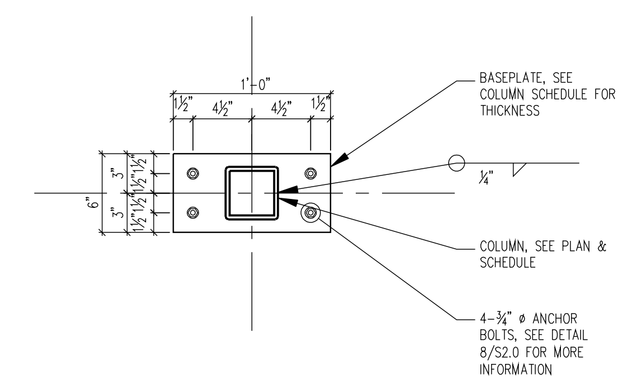

6 S2.0 BASE PLATE 'BP2' DETAIL
SCALE: NTS

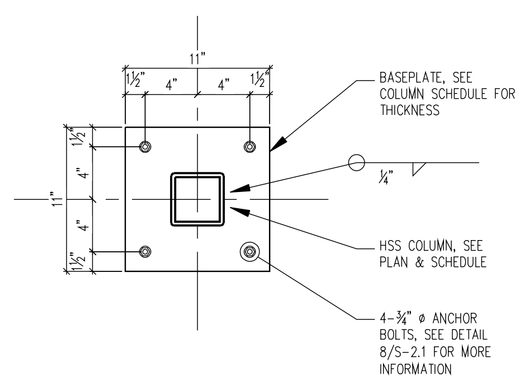

5 S2.0 BASE PLATE 'BP1' DETAIL
SCALE: NTS

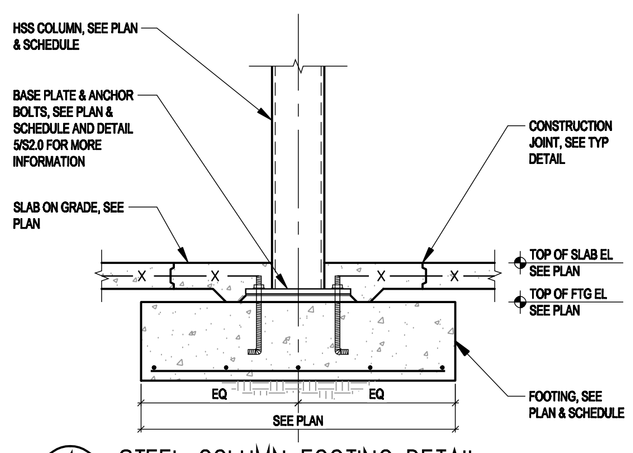

4 S2.0 STEEL COLUMN FOOTING DETAIL
SCALE: NTS

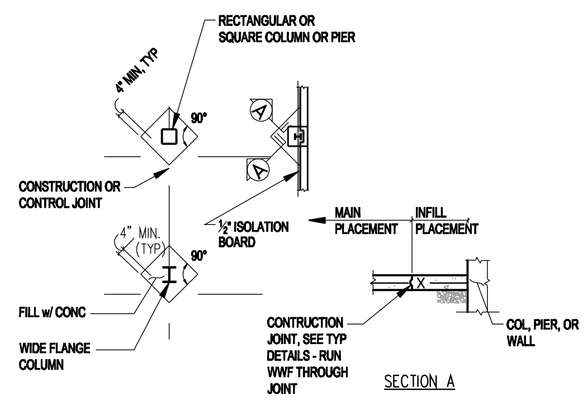

3 S2.0 TYPICAL ISOLATION JOINTS
SCALE: NTS

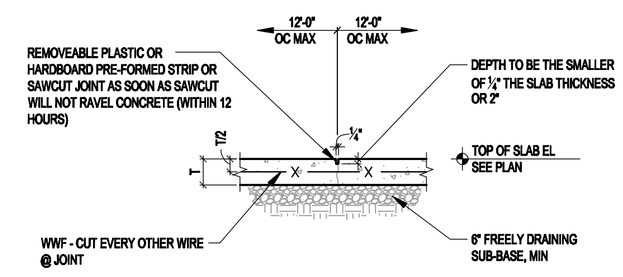

NOTE:
1. SEE THE FOUNDATION PLAN FOR SLAB THICKNESS, REINFORCEMENT, AND JOINT LOCATIONS.
2. SLAB SHALL BE PLACED USING "STRIP" OR "LANE" CONSTRUCTION.
3. FILL JOINTS WITH SEMI-RIGID EPOXY MATERIAL.

2 S2.0 SLAB ON GRADE CONTROL JOINT
SCALE: NTS

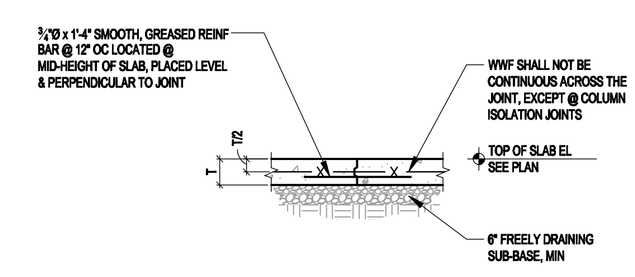

NOTE:
1. SEE THE FOUNDATION PLAN FOR SLAB THICKNESS, REINFORCEMENT, AND JOINT LOCATIONS.
2. SLAB SHALL BE PLACED USING "STRIP" OR "LANE" CONSTRUCTION.
3. FILL JOINTS WITH SEMI-RIGID EPOXY MATERIAL.
4. SMOOTH DOWEL BARS SHALL BE SAWN, NOT SHEARED.

1 S2.0 SLAB ON GRADE CONSTRUCTION JOINT
SCALE: NTS

Cold Spring Design
222 South Main Street
Fort Atkinson, WI 53538
P (920)568-9530
F (920)568-9531

ISSUE

#	DATE	DESCRIPTION

FOUR LAKES YACHT CLUB
6312 METROPOLITAN LANE - MONONA, WI 53713

CSD PROJECT #: 18054A

SCALE: AS NOTED
DATE: 12/23/2013
DRAWN BY: CFN
CHECKED BY: CFN

STRUCTURAL DETAILS

S2.0

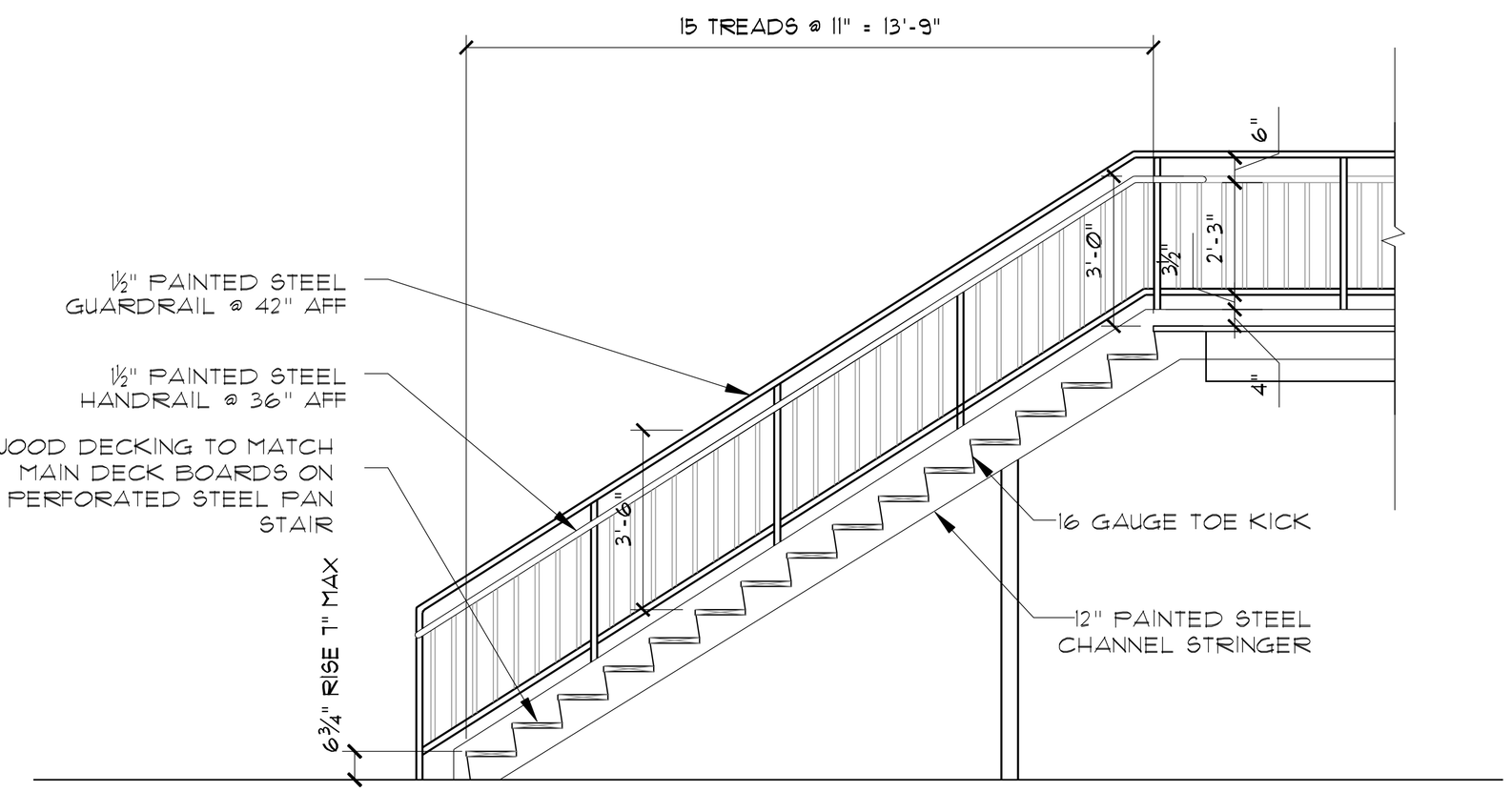

8 S3.0 STAIR SECTION SHOWING OPTION 1 RAILING
SCALE: NTS

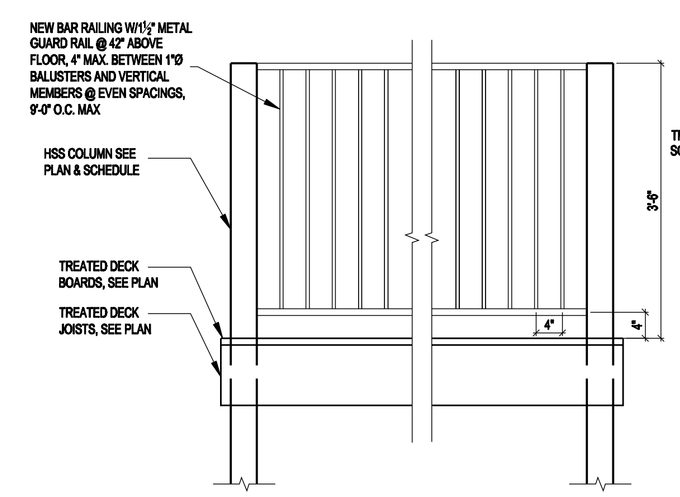

7 S3.0 RAILING CONNECTION DETAIL
SCALE: NTS

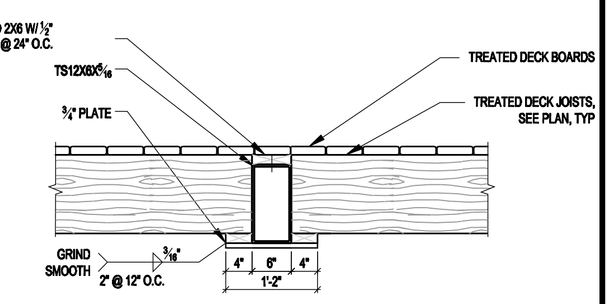

6 S3.0 BEAM TO DECK CONNECTION DETAIL
SCALE: NTS

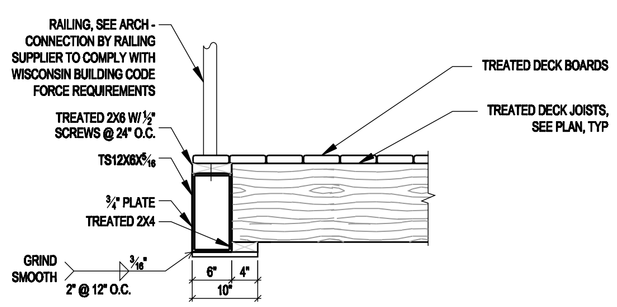

5 S3.0 BEAM TO DECK CONNECTION DETAIL
SCALE: NTS

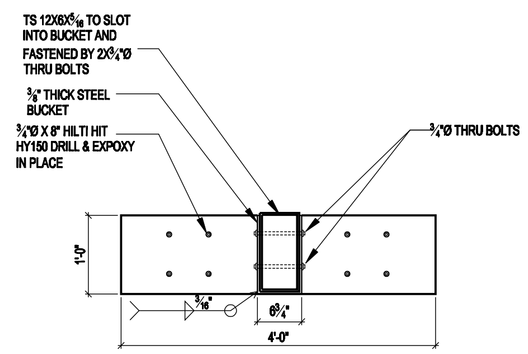

4 S3.0 BEAM TO EXISTING CMU WALL DETAIL
SCALE: NTS

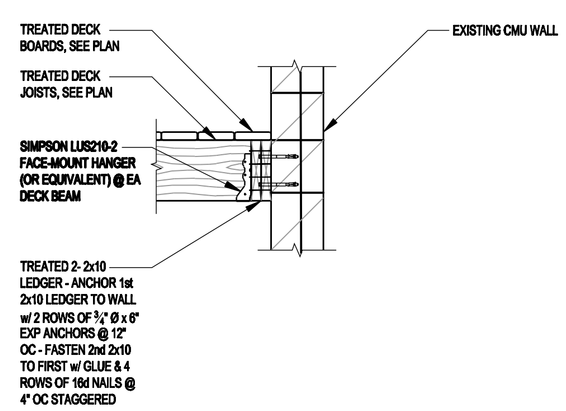

3 S3.0 FRAMING CONNECTION TO LEDGER
SCALE: NTS

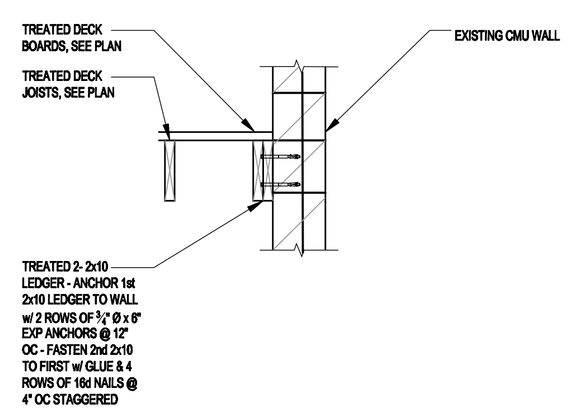

2 S3.0 DECKING CONNECTION TO LEDGER
SCALE: NTS

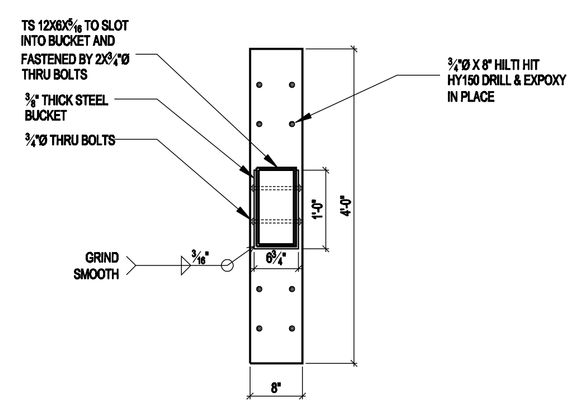

1 S3.0 BEAM TO EXISTING COLUMN DETAIL
SCALE: NTS

Cold Spring Design

222 South Main Street
Fort Atkinson, WI 53538
P (920)568-9530
F (920)568-9531

ISSUE

#	DATE	DESCRIPTION

FOUR LAKES YACHT CLUB
6312 METROPOLITAN LANE - MONONA, WI 53713

CSD PROJECT #: 13054A

SCALE:	AS NOTED
DATE:	12/23/2015
DRAWN BY:	CFN
CHECKED BY:	CFN

STRUCTURAL DETAILS

S3.0

REINFORCING NOTES

1. REINFORCING SHALL BE DETAILED IN ACCORDANCE WITH ACI 315 (CURRENT EDITION).

2. ALL LAPS SHALL BE CLASS 'B' PER ACI 318 UNLESS OTHERWISE NOTED ON THE DESIGN DRAWINGS, OR UNLESS THE DETAILER TAKES SPECIAL CARE TO PROVIDE STAGGERED LAPS. USE TOP BAR LAP LENGTHS FOR ALL HORIZONTAL WALL BARS AND FOR TOP BARS IN SLABS AND BEAMS OVER 12 INCHES DEEP.

3. LAP LENGTH SHALL BE SPECIFICALLY NOTED ON PLACING DRAWINGS WHERE MORE THAN ONE BAR MAKES UP A CONTINUOUS STRING.

4. CORNER BARS WITH CLASS 'B' PER ACI 318 LAPS SHALL BE PROVIDED AT ALL WALL CORNERS AND INTERSECTIONS PER DETAIL 1/S-.

5. HORIZONTAL BARS, EXCEPT FOR CONTINUOUS STRINGS FROM ONE CORNER OF OPENING TO ANOTHER, SHALL BE DETAILED TO SHOW THE DISTANCE FROM AT LEAST ONE END OF THE BAR TO THE NEAREST BUILDING GRID LINE OR WALL.

6. WELDED WIRE FABRIC SHALL BE LAPPED AND/OR ANCHORED TO DEVELOP Fy PER ACI 315.

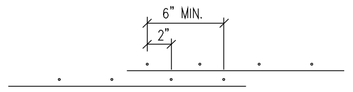

7. PROVIDE MINIMUM COVER PER ACI 318, 7.7.1.

8. PROVIDE REINFORCING AT CONCRETE OPENINGS PER DETAIL 2/S-.

9. PROVIDE TYPICAL VERTICAL WALL JOINTS PER DETAIL 3/S-.

10. PROVIDE ISOLATION BOARD WHERE SLABS ABUT VERTICAL SURFACES PER DETAIL 4/S-.

11. PROVIDE FOOTING STEPS PER DETAIL 5/S-.

12. PROVIDE SLAB ON GRADE CONSTRUCTION AND CONTROL JOINTS PER DETAILS 6 & 7/S-.

CAST-IN-PLACE CONCRETE NOTES

1. DESIGN AND CONSTRUCITON SHALL BE IN ACCORDANCE WITH THE LATEST PROVISIONS OF ACI 318 / 318R.

2. CONTRACTOR SHALL NOTIFY THE ARCHITECT AND ENGINEER AT LEAST 48 HOURS PRIOR TO PLACING CONCRETE TO FACILITATE ON SITE OBSERVATION OF REBAR.

3. ARRANGEMENT AND BENDING OF REINFORCING STEEL SHALL BE IN ACCORDANCE WITH ACI DETAILING MANUAL (ACI SP-66), LATEST EDITION.

4. EACH LAYER OF STEEL SHALL BE PLACED AS CLOSE TO EACH FACE AS POSSIBLE, MEETING MINIMUM COVER REQUIRED PER MILD STEEL REINFORCING CLEAR COVER NOTES.

5. PROVIDE COLUMN OR WALL DOWELS OF SAME SAIZE AND SPACING AS THE RESPECTIVE COLUMN OR WALL REINFORCING, UNLESS NOTED OTHERWISE. DOWELS SHALL BE TIED IN PRIOR TO CONCRETE PLACEMENT.

6. ALL HOOKS NOT NOTED SHALL BE ACI STANDARD HOOKS.

7. HORIZONTAL BARS, EXCEPT FOR CONTINUOUS STRINGS FROM ONE END OF THE BUILDING TO ANOTHER, SHALL BE DETAILED TO SHOW THE DISTANCE FROM AT LEAST ONE END OF THE BAR TO THE NEAREST BUILDING COLUMN OR WALL.

8. WHERE DOWELS MUST BE PLACED SO THAT FIELD BENDING IS REQUIRED TO ACCOMMODATE SUBSEQUENT WORK, GRADE 40 REINFORCING STEEL SHALL BE USED AND SPACING REDUCED TO ACHIEVE EQUIVALENT STRENGTH.

9. PROVIDE (2) #5 BARS AS STIRRUP SUPPORTS WHERE NO TOP STEEL IS OTHERWISE DETAILED OR SCHEDULED.

10. PLACE FIRST STIRRUP AT ½ SPACING FROM FACE OF SUPPORT.

11. REFER TO CORNER REINFORCING DETAIL FOR ADDED REINFORCING AT WALL CORNERS AND WALL INTERSECTIONS.

12. TERMINATE NON-CONTINUOUS ENDS OF TOP BARS IN BEAMS, JOISTS, AND SLABS WITH AT STANDARD HOOK IF CODE REQUIRED EMBEDMENT TO DEVELOP BAR CANNOT BE OBTAINED.

13. PROVIDE INTEGRITY STEEL CONTINUOUS OVER SUPPORTS AS DEFINED IN ACI 318 / 318R.

14. DETAIL AND PROVIDE SUITABLE WIRE SPACERS, CHAIRS, TIES, ETC., FOR SUPPORTING REINFORCING STEEL IN THE PROPER POSITION WHILE PLACING CONCRETE.

15. BARS SHALL BE SPLICED PER DETAILS WHERE PROVIDED. OTHERWISE BARS SHALL BE CLASS "B" LAP SPLICED IN LONGEST CONVENIENT LENGTHS WITH ADJACENT LAPS STAGGERED 3'-0" MINIMUM. USE TOP BAR LAP LENGTHS FOR ALL HORIZONTAL WALL BARS AND FOR TOP BARS IN SLABS AND BEAMS OVER 14" DEEP. LAP LENGTH SHALL BE SPECIFICALLY NOTED ON SHOP DRAWINGS WHERE MORE THAN ONE BAR MAKES UP A CONTINUOUS STRING.

16. IN WALLS, BEAMS, AND GRADE BEAMS, SPLICE CONTINUOUS TOP BARS AT MIDSPAN AND CONTINUOUS BOTTOM BARS OVER SUPPORTS, UNLESS NOTED OTHERWISE. WHERE TOP OF WALLS SLOPE, PLACE (2) #5 MINIMUM CONTINUOUS AND PARALLEL TO SLOPE.

17. PROVIDE (2) #5 BARS AROUND ALL OPENINGS AND (2) #5 BARS DIAGONALLY AT ALL OPENING CORNERS UNLESS OTHERWISE SPECIFIED. EXTEND 2'-6" PAST OPENING TYPICALLY. SEE TYPICAL DETAIL.

18. LAP WWF REINFORCING A DIMENSION EQUAL TO THE WIRE SPACING PLUS 2" (6" MIN).

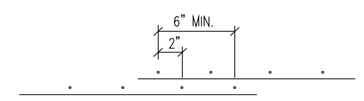

19. ALL CONTRUCITON JOINTS SHOWN SHALL BE INCORPORTATED INTO THE STRUCTURE UNLESS THEIR ELIMINATION IS APPROVED BY THE ENGINEER. ADDITIONAL CONSTRUCTION JOINTS REQUIRED TO FACILITATE CONSTRUCTION SHALL BE LOCATED AND DETAILED ON SHOP DRAWINGS AND ARE SUBJECT TO ENGINEER'S APPROVAL.

20. WHERE CONTROL AND CONSTURCTION JOINTS ARE NOT SHOWN, OR WHEN ALTERNATE LOCATIONS ARE PROPOSED, DRAWINGS SHOWING LOCATIONS OF JOINTS AND PLACING SEQUENCE SHALL BE SUBMITTED FOR REVIEW BY THE ENGINEER PRIOR TO PREPARATION OF THE RIENFORCING STEEL SHOP DRAWINGS.

21. HORIZONTAL CONTRUCTION JOINTS ARE NOT PERMITTED IN CONCRETE SLAB OR BEAM MEMBERS UNELESS SHOWN ON THE DRAWINGS OR APPROVED IN ADVANCE. VERTICAL CONSTRUCITON JOINTS OR BULKHEADS SHALL BE MADE AT MIDSPAN OR POINTS OF MINIMUM SHEAR AND SHALL ALSO BE SUBJECT TO THE APPROVAL OF THE ENGINEER.

22. SIZE OF CONCRETE POURS BETWEEN CONSTRUCTION JOINTS SHALL BE LIMITED TO:

WALLS – MAXIMUM LENGTH OF 100 FEET WITH INTERMEDIATE CONTROL JOINTS AT APPROXIMATELY 30 FEET. DO NOT LOCATE WITHIN 5 FEET OF A CORNER OR COLUMN.

SLABS ON GRADE – 3,600 SQ FEET WITH MAXIMUM DIMENSION OF 60 FEET. PLACE IN LANE OR STRIP FASHION WITH INTERMEDIATE CONTROL JOINTS AT APPROXIMATELY 30 FEET OR 15 FEET FOR EXPOSED CONCRETE SURFACES.

23. ALLOW AT LEAST 24 HOURS BETWEEN POURING ADJACENT WALL SECTIONS BETWEEN CONSTRUCTION JOINTS.

24. PROVIDE TWO (2) LAYERS OF 6 MIL POLY OR 15 LB FELT BOND BREAK WHERE SLABS-ON-GRADE ABUT EXTERIOR FOUNDATION WALLS.

25. PROVIDE ½" EXPANSION JOINT MATERIAL AT INTERIOR LOCATIONS WHERE SLABS ABUT WALLS, COLUMNS, AND OTHER VERTICAL SURFACES UNLESS NOTED OTHERWISE.

26. CONCRETE COLUMNS OR PIERS SHOWN INTEGRAL WITH CONCRETE WALL SHALL BE POURED MONOLITHICALLY WITH ADJACENT CONCRETE WALLS.

27. NO CONCRETE TEST WILL BE ACCEPTED IF CONCRETE IS ALTERED IN ANY WAY AFTER SAID TEST SAMPLE IS TAKEN. REPEAT TEST IF WATER IS ADDED AFTER INITIAL SAMPLING.

28. AT ALL CONCRTE WALLS, BEAMS, AND COLUMNS RECEIVING MASONRY VENEER OF ONE FOOT OR HIGHER AND MASONRY WALLS ABUTTING CONCRETE WLALS AND COLUMNS. PROVIDE MASONRY ANCHOR SLOTS IN CONCRETE FOR VENEER ANCHORS WITH MAXIMUM SPACING OF 2'-0" OC. SEE ARCHITECTURAL DRAWINGS FOR BRICK SHELF ELEVATIONS.

29. PROVIDE A ¾" CHAMFER ON EXPOSED CORNERS OF CONCRETE. TOP EDGES OF WALLS SHALL BE TOOLED UNLESS NOTED OTHERWISE.

30. PROVIDE CAMBER OF BEAMS AND SLABS AS REQUIRED BY THE DRAWINGS WITHOUT REDUCING THE SPECIFIC THICKNESS OF THE CONCRETE MEMBERS.

31. NO WELDING WILL BE PERMITTED ON GRADE 40 OR 60 REINFORCING STEEL UNLESS CARBON CONTENT IS VERIFIED BY MILL CERTIFICATES AND APPROVED PRE-HEAT PROCEDURES ARE ESTABLISHED AND FOLLOWED IN THE FIELD.

32. NO CONDUITS, PIPES, DUCTS, OR FIXTURES SHALL BE PLACED IN CONCRETE COLUMNS OR BEAMS (UNLESS SPECIFIC REVIEW AND APPROVAL IS MADE BY THE ENGINEER). MINIMUM DISTANCE FROM THE COLUMN PERIPHERY MUST BE AT LEAST THE SLAB DEPTH (INCLUDING DROP, IF ANY).

33. PIPE OR ELECTRICAL CONDUIT EMBEDDED IN CONCRETE SHALL NOT BE LARGER IN OUTSIDE DIAMETER AT ITS WIDEST POINT (OR FITTING) THAN THE ONE THIRD (⅓) THE THICKNESS OF THE SLAB OR WALL IN WHICH THEY ARE EMBEDDED.

34. SLEEVES, CONDUITS, OR PIPES THORUGH SLABS AND WALLS SHALL BE PLACED SO THAT THEY ARE NOT CLOSER THAN THREE DIAMETERS ON CENTER AND SO THAT THEY DO NOT DISPLACE REINFORCING.

35. ALUMINUM CONDUIT OR PIPING MAY NOT BE EMBEDDED IN ANY CONCRETE.

STRUCTURAL ABBREVIATIONS

AB – ANCHOR BOLT
ALT – ALTERNATE
AGG – AGGREGATE
ALUM – ALUMINUM
ARCH – ARCHITECT/ ARCHITECTURAL

BLDG – BUILDING
BLK – BLOCK (CMU)
BM – BEAM
BOT – BOTTOM
BRG – BEARING

C – CHANNEL DESIGNATION
CB – CATCH BASIN
CI – CAST IRON
CIP – CAST-IN-PLACE
CJ – CONSTRUCTION/ CONTROL JOINT
CL – CENTER LINE
CLG – CEILING
CLR – CLEAR DISTANCE
CMU – CONCRETE MASONRY UNIT
COL – COLUMN
CONC – CONCRETE
CONT – CONTINUOUS
CONTR – CONTRACTOR

D – DEPTH
DBA – DECK BEARING ANGLE
DIA – DIAMETER
DIM – DIMENSION
DN – DOWN
DP – DRILLED PIER
DTL – DETAIL
DWG – DRAWING
DWL – DOWEL

EA – EACH
EC – ELECTRICAL CONTRACTOR
EJ – EXPANSION JOINT
EL – ELEVATION
ELEV – ELEVATOR
ENG – ENGINEER
EQ – EQUAL
EW – EACH WAY
E-W – EAST-WEST DIRECTION
EXIST – EXISTING
EXP – EXPANSION
EXT – EXTERIOR

FD – FLOOR DRAIN
FDN – FOUNDATION
FE – FIRE EXTINGUISHER
FF – FINISH FLOOR
FT – FLOOR TRUSS
FTG – FOOTING
FUT – FUTURE
FV – FIELD VERIFY

GA – GAUGE
GALV – GALVANIZED
GC – GENERAL CONTRACTOR
GL – GRID LINE/COLUMN LINE

HC – HVAC CONTRACTOR
HK – HOOK
HM – HOLLOW METAL
HORIZ – HORIZONTAL
HP – HIGH POINT
HSS – HOLLOW STRUCTURAL SECTION (REPLACES "TS" DESIGNATION)
HT – HEIGHT
HVAC – HEATING, VENTILATING, & AIR CONDITIONING

ID – INSIDE DIAMETER
IF – INSIDE FACE
INSUL – INSULATION
INT – INTERIOR

JBE – JOIST BEARING ELEVATION
JT – JOINT

L – STEEL ANGLE DESIGNATION
LG – LENGTH/LONG
LLH – LONG LEG HORIZONTAL
LLV – LONG LEG VERTICAL
LP – LOW POINT
LVL – LAMINATED VENEER LUMBER

MAX – MAXIMUM
MBW – MASONRY BEARING WALL
MIN – MINIMUM
MSW – MASONRY SHEAR WALL
MTL – METAL

NIC – NOT IN CONTRACT
NOM – NOMINAL
NTS – NOT TO SCALE
N-S – NORTH-SOUTH DIRECTION

OC – ON CENTER
OD – OUTSIDE DIAMETER
OF – OUTSIDE FACE
OH – OVER HEAD
OPP – OPPOSITE

PERIM – PERIMETER
PC – PRECAST / PRESTRESSED
PL – STEEL PLATE DESIGNATION
PT – POINT
P/T – POST TENSIONED

R – RADIUS
RD – ROOF DRAIN
REINF – REINFORCING / REINFORCEMENT
REQ'D – REQUIRED

SCHED – SCHEDULE
SIM – SIMILAR
SHT – SHEET
SPA – SPACE / SPACES
SPEC – SPECIFICATION
SQ – SQUARE
SS – STAINLESS STEEL
STL – STEEL
STR – STRUCTURAL

THK – THICK
TL – TOP OF LEDGE ELEVATION
TP – TOP OF PIER ELEVATION
TS – SEE HSS DESIGNATION
TYP – TYPICAL
TW – TOP OF WALL ELVATION

UD – URINAL SLAB DEPRESSION
UNO – UNLESS NOTED OTHERWISE

VERT – VERTICAL
VIF – VERIFY IN FIELD

W – WIDTH
W/ – WITH
W/O – WITHOUT
WD – WOOD
WF – WIDE FLANGE DESIGNATION
WP – WORKING POINT
WSBW – WOOD STUD BEARING WALL
WWF – WELDED WIRE FABRIC

MILD REINFORCING STEEL MINIMUM CLEAR COVER

CONCRETE CAST AGAINST EARTH AND PERMANENTLY EXPOSED TO EARTH	
FOOTINGS	3" MIN
CONCRETE EXPOSED TO EARTH OR WEATHER	
WALLS, COLUMNS, & BEAMS	
BARS UP TO #5	1½" MIN
#6 BARS AND UP	2" MIN
CONCRETE NOT EXPOSED TO EARTH OR WEATHER	
WALLS	
BARS UP TO #11	¾" MIN
#14 BARS AND UP	1½" MIN
ELEVATED SLABS	
TOP BARS	¾" MIN
BOTTOM BARS	1" MIN
BEAMS	
ALL BARS	1½" MIN
COLUMNS	
ALL BARS	1½" MIN

GENERAL NOTES

1. USE LATEST EDITION OR REVISION FOR ALL REFERENCED CODES AND/OR STANDARDS.

2. CONSULT ARCHITECTURAL, MECHANICAL, PLUMBING, AND ELECTRICAL DRAWINGS FOR LOCATION AND DIMENSIONS OF CURBS, PADS, INSERTS, SLEEVES, DRIPS, REGLETS, REVEALS, DEPRESSIONS, AND OTHER PROJECT REQUIREMENTS NOT SHOWN ON STRUCTURAL DRAWINGS.

3. SIZE AND LOCATION OF ALL ROOF, FLOOR, AND WALL OPENINGS TO BE VERIFIED WITH MECHANICAL AND ELECTRICAL CONTRACTORS REQUIRING SUCH OPENINGS.

4. CONSULT ARCHITECT FOR ANY NECESSARY DIMENSIONS WHICH ARE NOT SHOWN ON PLANS. SCALING OF DRAWINGS IS NOT PERMITTED.

5. SIMILAR PORTIONS OF THE BUILDING SHALL HAVE SIMILAR DETAILING UNLESS NOTED OTHERWISE.

6. ELEVATIONS SHOWN ON PLAN ARE BASED ON 100'-0" AS FINISHED FIRST FLOOR ELEVATION.

7. ELEVATIONS SHOWN ON PLANS ARE TO TOP OF STEEL, CONCRETE, OR PLYWOOD SHEATHING, UNLESS NOTED OTHERWISE.

8. ALL WORK SHALL CONFORM TO OSHA REQUIREMENTS.

9. STRUCTURAL MEMBERS INCLUDING JOISTS, SLABS, BEAMS, TRUSSES, COLUMNS, AND WALLS ARE DESIGNED FOR "IN PLACE" LOADS. CONTRACTOR IS RESPONSIBLE FOR BRACING, WITHOUT OVER STRESSING, ALL STRUCTURAL ELEMENTS (AS REQUIRED AT ANY STAGE OF CONSTURCTION) UNTIL COMPLETION OF THIS PROJECT.

10. IN NO CASE SHALL STRUCTURAL ALTERATIONS OR WORK AFFECTING A STRUCTURAL MEMBER BE MADE, UNLESS APPROVED BY THE ARCHITECT.

11. SUBMIT REPRODUCIBLE COPY OF ALL STRUCTURAL SHOP DRAWINGS.

DESIGN CRITERIA

DESIGN CODE
INTERNATIONAL BUILDING CODE 2012 w/ WISCONSIN AMENDMENTS

DESIGN LOADS
LIVE LOAD INFORMATION

BALCONY/DECK	100 psf

SOIL LOAD INFORMATION

ALLOWABLE NET SOIL BEARING PRESSURE – Qa	1500 psf (ASSUMED – TO BE FIELD VERIFIED)

DESIGN PROPERTIES

REINFORCING STEEL STRENGTHS	
BARS – ASTM A615, GRADE 60	Fy = 60,000 psi
WWF – ASTM A165	Fy = 65,000 psi
BOLT STRENGTHS	
ANCHOR BOLTS – ASTM A307 OR A36	
HIGH STRENGTH BOLTS – ASTM A325N	
EXPANSION BOLTS – WEDGE TYPE	
CAST-IN-PLACE CONCRETE STRENGTHS	
FOOTINGS	f'c = 3,000 psi
WALLS	f'c = 4,000 psi
SLAB ON GRADE	f'c = 4,000 psi
PRECAST CONCRETE TOPPING	f'c = 4,000 psi
SITE PAVEMENT – CURBS	f'c = 3,000 psi
STRUCTURAL STEEL STRENGTHS	
WF SHAPES – ASTM A992	Fy = 50,000 psi
C SHAPES, L SHAPES, PLATES, & BARS – ASTM A36	Fy = 36,000 psi
TS OR HSS SHAPES – ASTM A500, GRADE B	Fy = 46,000 psi
CONCRETE MASONRY STRENGTHS	
CMU – ASTM C90, GRADE N	f'm = 1,500 psi
CONCRETE BRICK – ASTM C55, GRADE N	f'm = 2,500 psi
CLAY HOLLOW BRICK – ASTM C652, GRADE SW	f'm = 3,000 psi
MORTAR – ASTM C270	
TYPE M – BELOW GRADE	fu = 2,500 psi
TYPE S – ABOVE GRADE	fu = 1,800 psi
GROUT – ASTM C476	
BOND BEAMS	f'c = 3,000 psi
WALLS AND PIERS	f'c = 3,000 psi

CANADIAN DIMENSIONAL LUMBER STRENGTHS – BASE VALUES
2" TO 4" THICK AND WIDER
BASE VALUES IN psi – TO BE USED WITH ADJUSTMENT FACTORS

SPECIES	GRADE	EXT FIBER STRESS IN BENDING Fb	TENSION PARALLEL TO GRAIN Ft	HORIZ SHEAR Fv	COMP ⊥ TO GRAIN Fc⊥	COMP ∥ TO GRAIN Fc	MODULUS OF ELASTICITY E
SPRUCE	SEL STR	1250	675	70	425	1400	1.5
PINE FIR	NO 1/NO 2	875	425	70	425	1100	1.4
	NO 3	500	250	70	425	625	1.2
	STUD	675	325	70	425	675	1.2
DOUGLAS	SEL STR	1300	800	95	625	1900	1.9
FIR LARCH	NO 1/NO 2	825	500	95	625	1350	1.6
(N)	NO 3	475	300	95	625	775	1.4
	STUD	650	375	95	625	850	1.4
HEM FIR	SEL STR	1300	775	75	370	1650	1.7
(N)	NO 1/NO 2	1000	550	75	370	1450	1.6
	NO 3	575	325	75	370	850	1.4
	STUD	775	425	75	370	925	1.4
NORTHERN	SEL STR	950	450	65	350	1100	1.1
SPECIES	NO 1/NO 2	575	275	65	350	825	1.1
	NO 3	350	150	65	350	475	1.0
	STUD	450	200	65	350	525	1.0

Cold Spring Design
222 South Main Street
Fort Atkinson, WI 53538
P (920)568-9530
F (920)568-9531

ISSUE

#	DATE	DESCRIPTION

FOUR LAKES YACHT CLUB
6312 METROPOLITAN LANE – MONONA, WI 53713

CSD PROJECT #: 130184A

SCALE: AS NOTED
DATE: 12/23/2013
DRAWN BY: CFN
CHECKED BY: CFN

STRUCTURAL NOTES & SCHEDULES

S0.0